REVISIONS			
ZONE	REV	DESCRIPTION	DATE

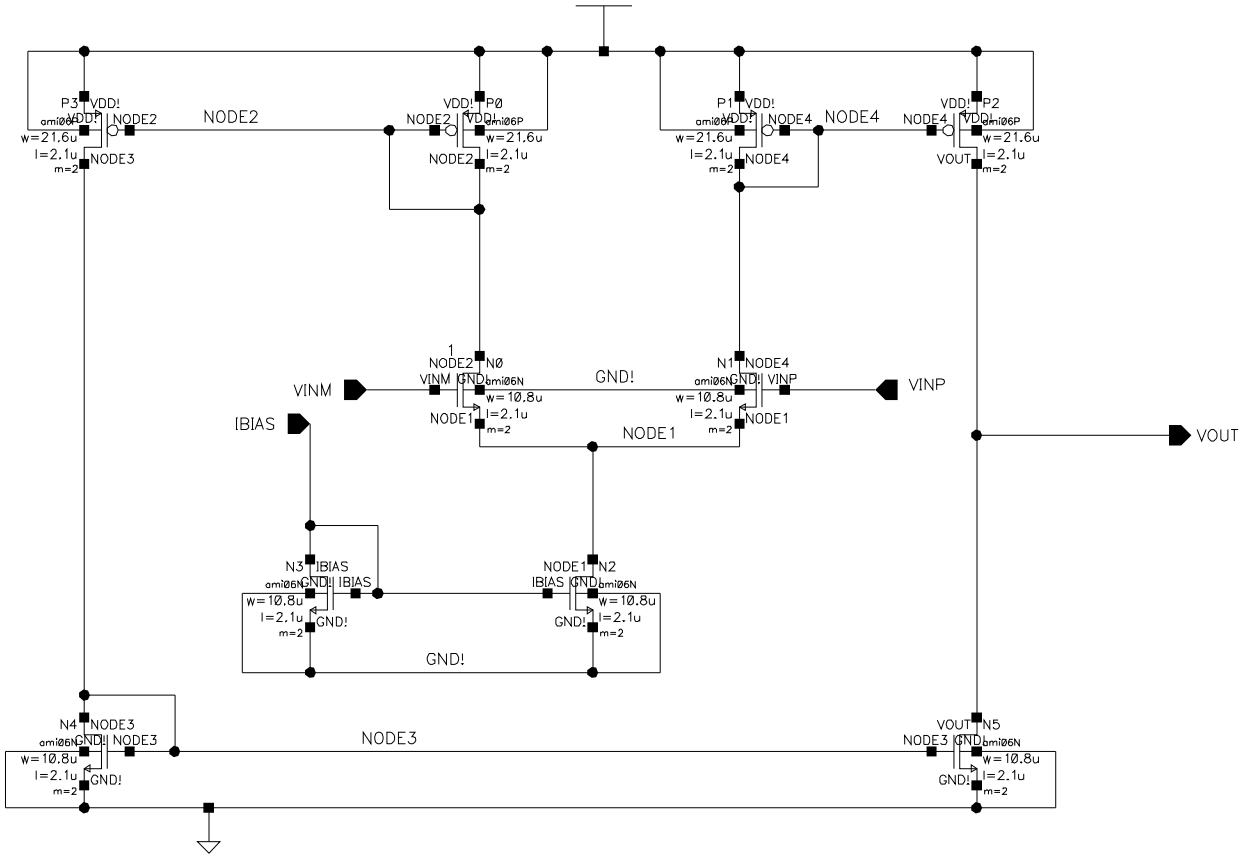

University of Tennessee – ECE651

UPDATED		
Nov 9 10:22:03 2002		
BY		
scterry		
SIZE		REV
A		

SHEET 1 of 1