The Convolution Integral

for a system with impulse response $h(t)$ & input $v_i(t)$

$$v_o(t) = \int_{-\infty}^{\infty} h(t-\tau)\, v_i(\tau)\, d\tau$$

for <u>causal</u> systems $h(t)$ is zero for $t < \emptyset$

$$v_o(t) = \int_{0}^{\infty} h(t-\tau)\, v_i(\tau)\, d\tau$$

$$v_o(t) = h(t) * v_i(t)$$ ← shorthand for convolution integral

Laplace transform property

$$V_o(s) = V_I(s) \cdot H(s) \iff v_o(t) = \int_0^{\infty} h(t-\tau)\, v_i(\tau)\, d\tau$$

shift, flip

$h(-\tau + t)$

Graphical Convolution

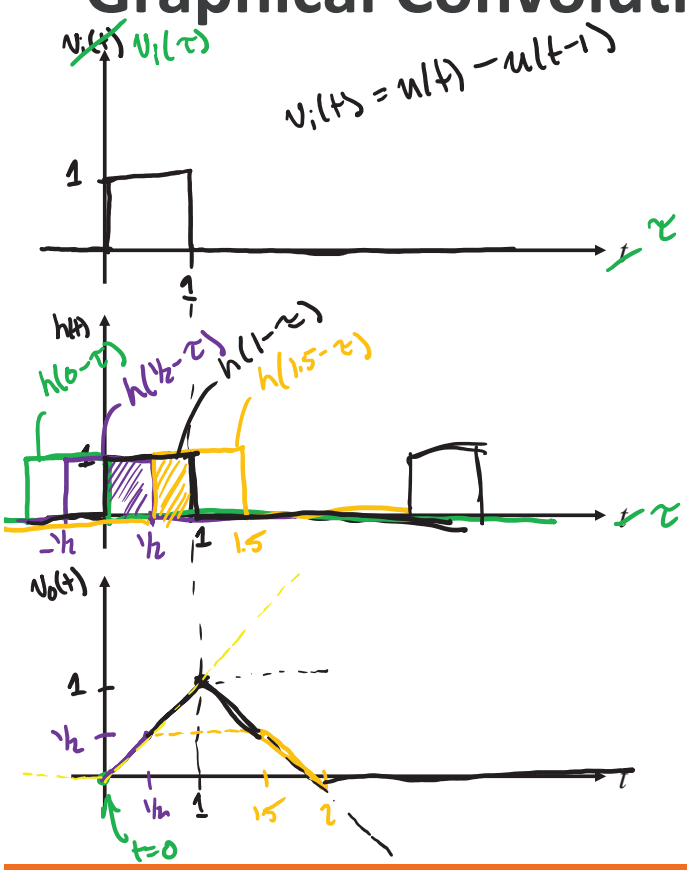

$$v_o(t) = \int_0^{\infty} h(t-\tau)\, v_i(\tau)\, d\tau$$

$$v_o(t) = \begin{cases} 0, & t < 0 \\ \int_0^t 1\,dt = t, & 0 \le t < 1 \\ \int_{t-1}^{1} 1\,dt = 2-t, & 1 \le t < 2 \\ \emptyset, & 2 < t \end{cases}$$

$$v_o(t) = r(t) - 2r(t-1) + r(t-2)$$

$$= t\,u(t) - 2(t-1)u(t-1) + (t-2)u(t-2)$$

$$V_I(s) = \frac{1}{s} - e^{-s}\frac{1}{s} = H(s)$$

$$V_o(s) = V_I(s)\, H(s)$$

$$= \frac{1}{s^2} + e^{-2s}\frac{1}{s^2} - 2e^{-s}\frac{1}{s^2}$$

$$v_o(t) = \mathcal{L}^{-1}\{V_o(s)\} = t\,u(t) + (t-2)u(t-2) - 2(t-1)u(t-1)$$

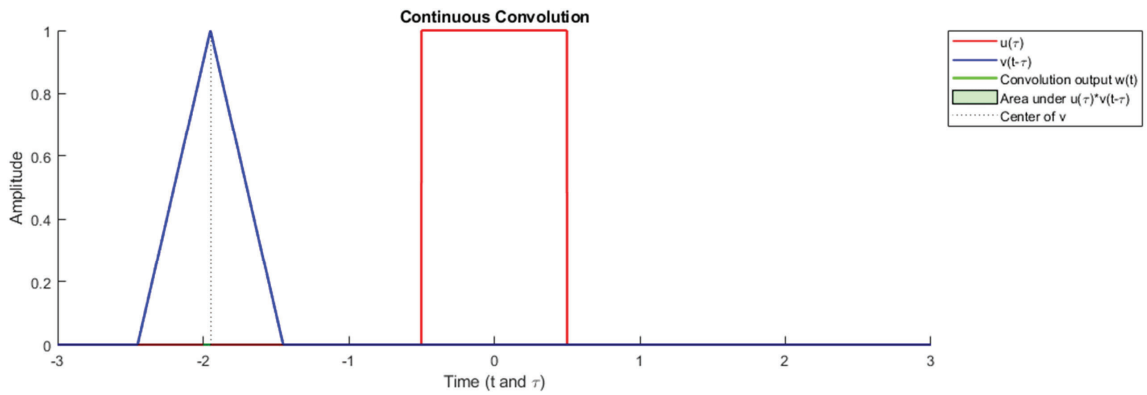

https://www.mathworks.com/matlabcentral/fileexchange/97112-convolution-in-digital-signal-processing

Example Problem

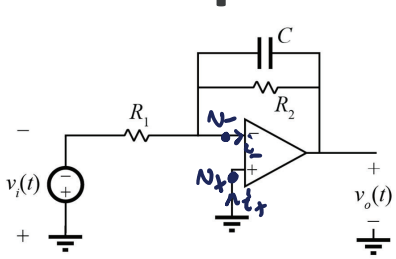

Ideal op-amp assumptions

(1) If there is negative feedback

$N_+ = N_-$ (virtual short)

(2) $i_+ = i_- = \phi$

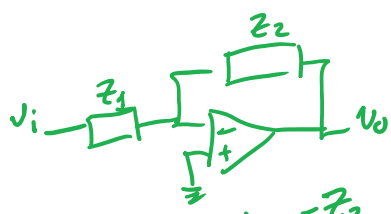

$$\frac{V_o(s)}{V_I(s)} = \frac{-Z_2}{Z_1}$$

Laplace Transform

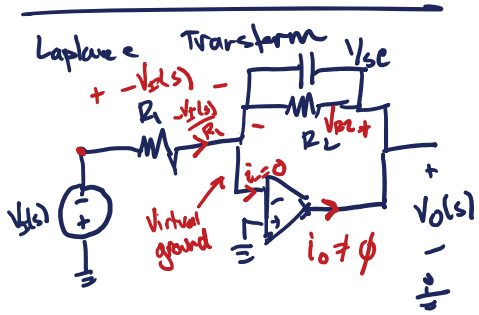

$$I_{R1} = \frac{-V_I(s)}{R_1}$$

$$V_{R2} = -(I_{R1})\left(\frac{1}{sC} \| R_2\right)$$

$$V_o = \phi + V_{R2} = \frac{V_I(s)}{R_1}\left(\frac{1}{sC} \| R_2\right)$$

$$\boxed{V_o(s) = V_I(s)\,\frac{R_2}{R_1}\,\frac{1}{1+R_2 sC}}$$