Diode Stored Charge

The diode equation:

$$q(t) = Q_0\left(e^{\lambda v(t)} - 1\right)$$

Charge control equation:

$$\frac{dq(t)}{dt} = i(t) - \frac{q(t)}{\tau_L}$$

With:

λ= 1/(26 mV) at 300 K

τ_L = minority carrier lifetime

(above equations don't include current that charges depletion region capacitance)

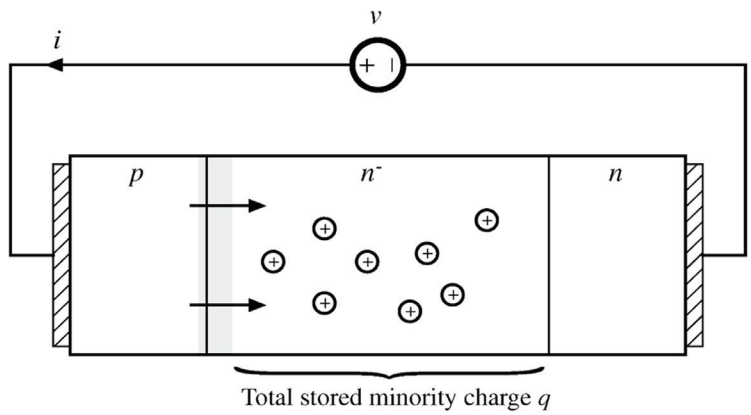

In equilibrium: $dq/dt = 0$, and hence

$$i(t) = \frac{q(t)}{\tau_L} = \frac{Q_0}{\tau_L}\left(e^{\lambda v(t)} - 1\right) = I_0\left(e^{\lambda v(t)} - 1\right)$$

Diode Turn-On

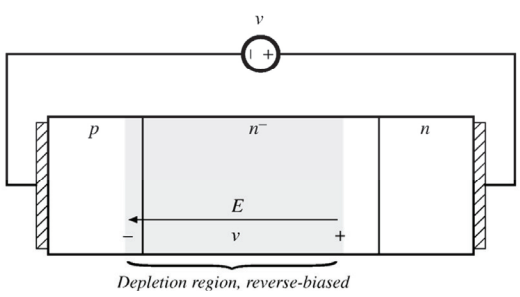

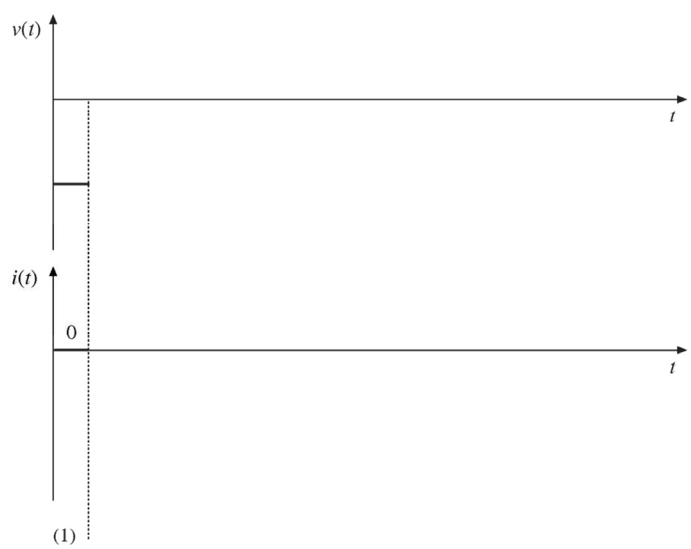

Diode Turn-Off

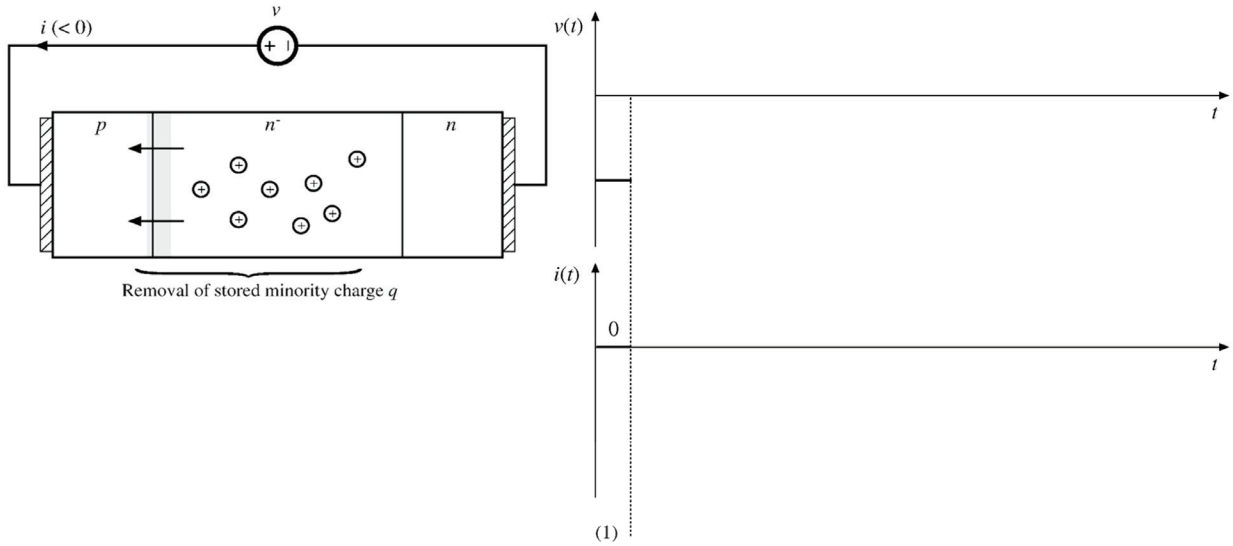

Diode Reverse Recovery

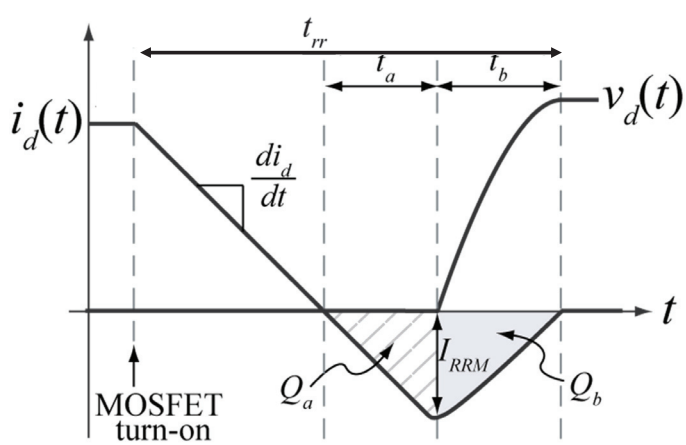

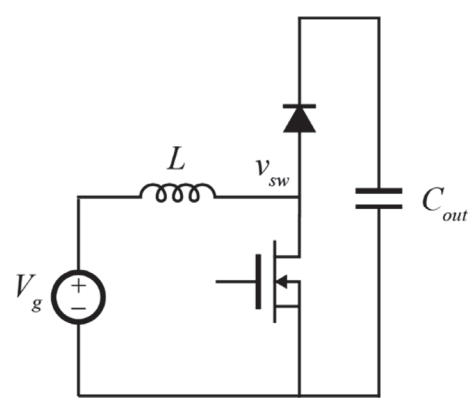

Diode Switching Waveforms

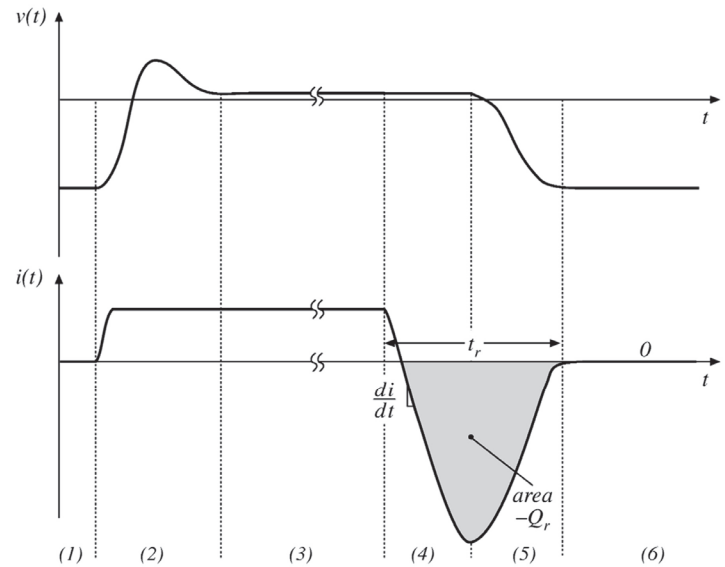

Datasheet RR Characteristics

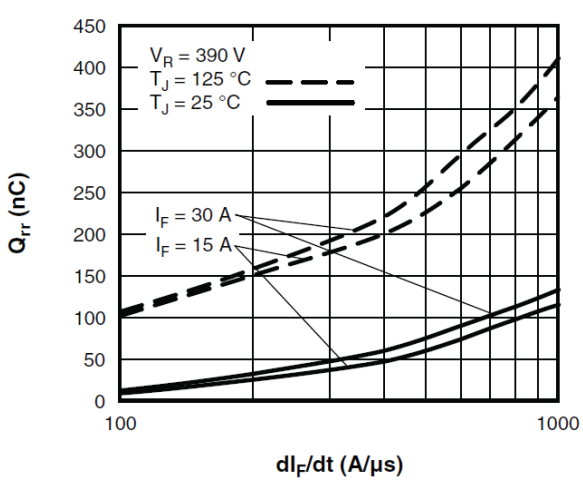

Fig. 10 - Typical Stored Charge vs. dI_F/dt

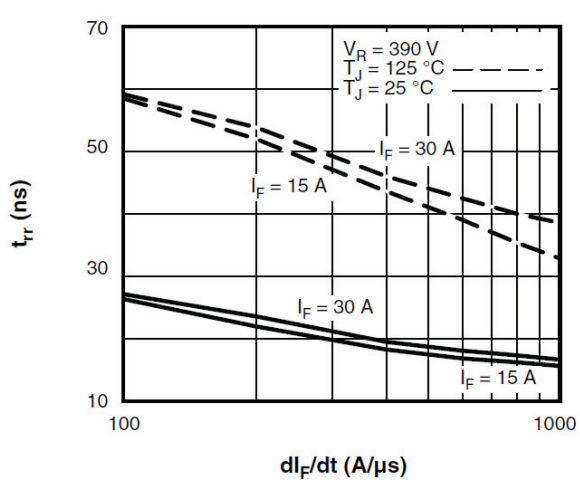

Fig. 9 - Typical Reverse Recovery Time vs. dI_F/dt

Including Switching Loss in Avg. Equivalent Circuit

- Switching losses can be included with little modification
- Simply sketch waveforms with (non-ideal) switching transitions, then average as normal
- Steady-state averaging holds as normal:
  - $\langle v_L \rangle = 0, \langle i_C \rangle = 0, \langle i_g \rangle = I_g$
- Use resulting equations to construct equivalent circuit model

Buck Converter Example

- All elements ideal except for reverse recovery (Q_r and t_r) of diode

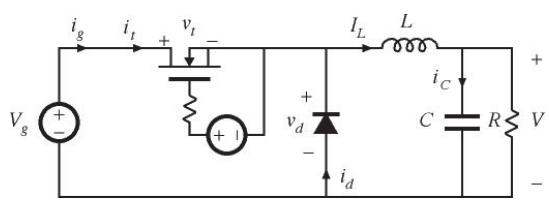

Buck Average Model with RR

Predicted Efficiency vs Duty Cycle

- Switching frequency 100 kHz
- Input voltage 24 V
- Load resistance 15 Ω
- Recovered charge 0.75 μCoul
- Reverse recovery time 75 nsec

- (no attempt is made here to model how the reverse recovery process varies with inductor current)

- Substantial degradation of efficiency
- Poor efficiency at low duty cycle

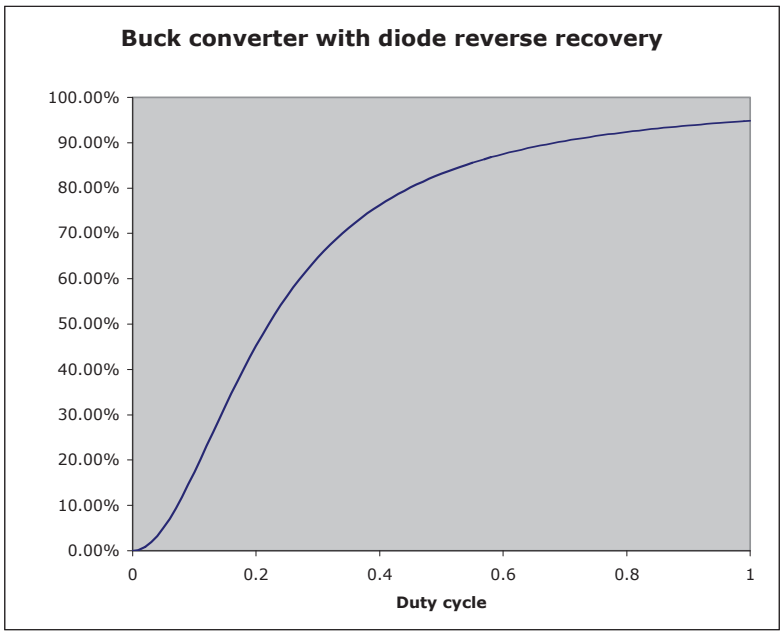

Paralleling Diodes

Attempts to parallel diodes, and share the current so that $i_1 = i_2 = i/2$, generally don't work.

Reason: thermal instability caused by temperature dependence of the diode equation.

Increased temperature leads to increased current, or reduced voltage.

One diode will hog the current.

To get the diodes to share the current, heroic measures are required:

- Select matched devices
- Package on common thermal substrate
- Build external circuitry that forces the currents to balance

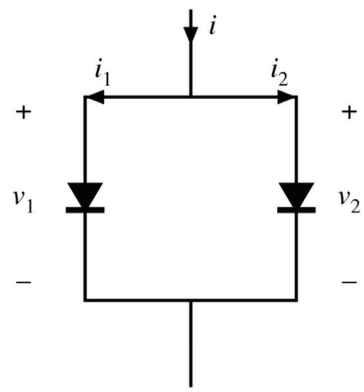

Types of Power Diodes

Standard recovery

Reverse recovery time not specified, intended for 50/60Hz

Fast recovery and ultra-fast recovery

Reverse recovery time and recovered charge specified

Intended for converter applications

Schottky diode

A majority carrier device

Essentially no recovered charge

Model with equilibrium i-v characteristic, in parallel with depletion region capacitance

Restricted to low voltage (few devices can block 100V or more)

Schottky Diode

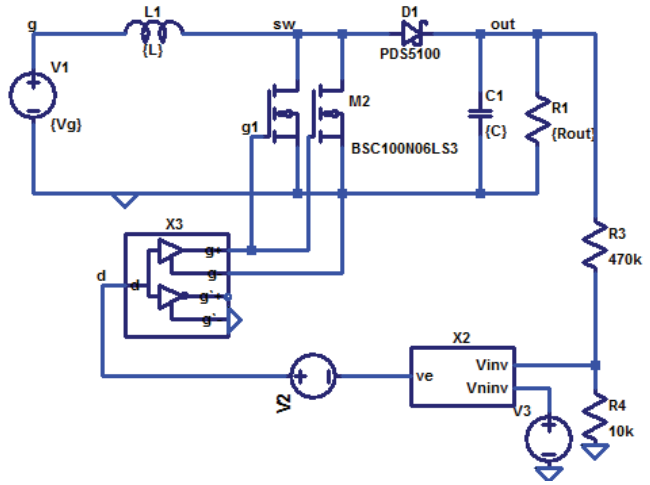

L	C_{out}	f_s	Diode	η (Sim)
22uH	22uF	200k	Si (FR)	93.9%
22uH	22uF	200k	Si Schottky	96.9%

Simulation Waveforms

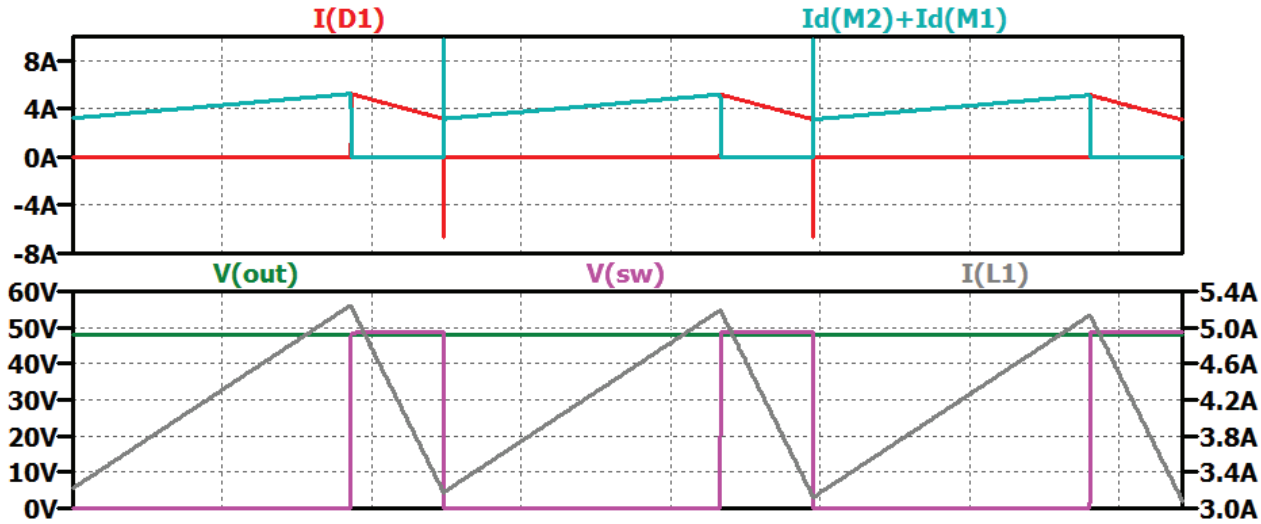

Switching Transition

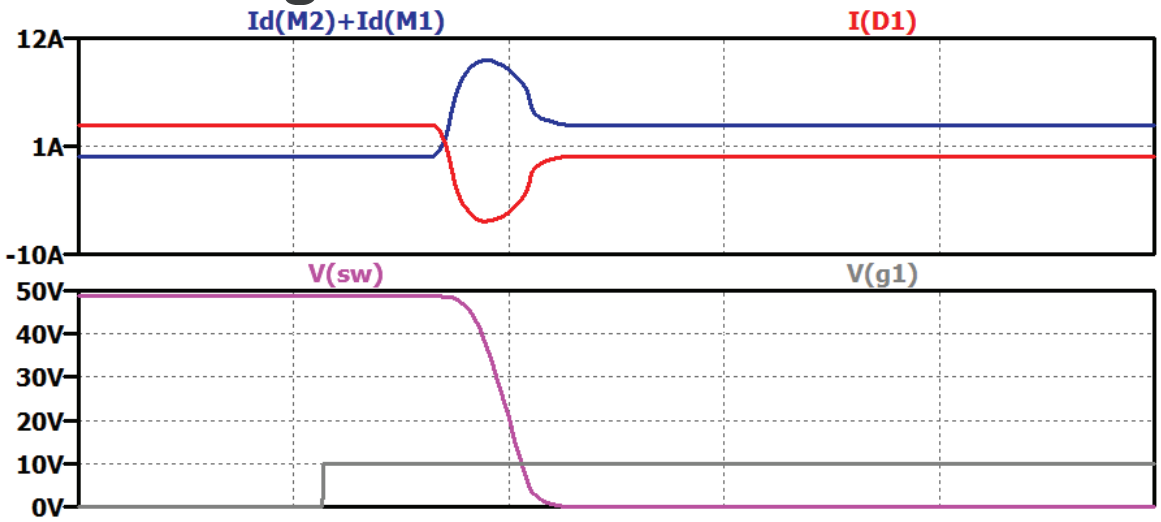

Power MOSFET