ECE 481: Power Electronics

Prof. Daniel Costinett
Department of Electrical Engineering and Computer Science
University of Tennessee Knoxville
Fall 2017

THE UNIVERSITY OF TENNESSEE KNOXVILLE

ECE 481: Power Electronics

- Instructor: Prof. Daniel Costinett
  - Office: MK502
  - Telephone: (865) 974-3572
  - Email: dcostine@utk.edu
    - Please use **[ECE481]** in the subject line for all course-related e-mails.
  - Office Hours: W 12:30-1:30pm, T 3:00-4:00pm

Course Materials

- Textbook:
  - Erickson and Maksimovic, *Fundamentals of Power Electronics*, second edition, Kluwer Academic Publishers, ISBN 0-7923-7270-0
  - Available through campus bookstore, online vendors, or online through UT libraries
- Course Website
  - **http://web.eecs.utk.edu/~dcostine/ECE481**
  - Includes lectures slides, handouts, supplemental notes, homework assignments, course announcements

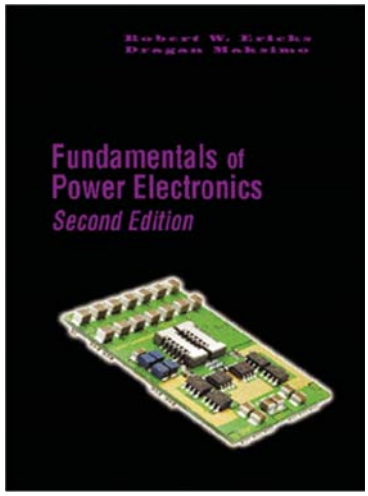

Assignments

- Homework (35%)
  - Due at *beginning* of class on date listed on Lecture Schedule web page (Fridays)
  - No late work accepted except in cases of documented emergencies
  - Collaboration is encouraged on all homework assignments but must turn in *your own* work
- Midterms and Labs (35%)
- Final (30%)

Lab Sequence

- Hands-on experience testing and controlling GaN-based converter
- 3-lab sequence in modeling, open-loop control and analysis, and closed-loop control
- Completed in groups of 2-3 outside of normal lecture hours

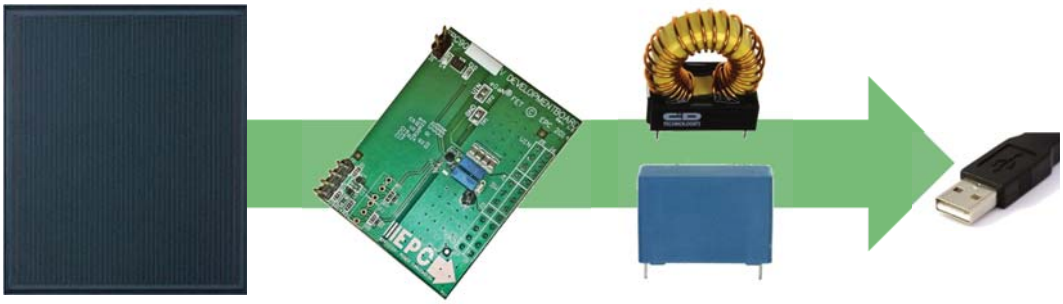

ECE 481 vs ECE 599

- Students enrolled in ECE 599 will have additional homework and exam problems
- Grading
  - Separate curving for ECE 481 and ECE 599
  - Extra credit is added to final grade after any curving

How to Succeed in ECE 481

- Attend all lectures
  - Participate; ask questions or ask for clarification
- Read textbook for additional explanation
- Complete all homework assignments
  - Attempt homework alone prior to collaborating
  - Review and understand mistakes
  - ~12 assignments for 35% of the grade

Power Electronics Courses at UTK

Junior	Senior	Graduate	
ECE 325 Electric Energy System Components	ECE 481 Power Electronics	ECE 523 Power Electronics and Drives	ECE 623 Advanced Power Electronics and Drives
	ECE 482 Power Electronic Circuits	ECE 525 Alternative Energy Sources	ECE 625 Utility Applications of Power Electronics
		ECE 581 High Frequency Power Electronics	ECE 626 Solid State Power Semiconductors

Undergraduate Research in Power Electronics

- Opportunity for paid (hourly) undergraduate research developing SiC microgrid converters
  - Testing of high voltage transistors and controllers
  - Software for controlling microgrid converters
- Timeframe: immediate start, continues through Spring semester
- Contact Professor Fred Wang for details
- Fred.wang@utk.edu

Introduction to Power Conversion

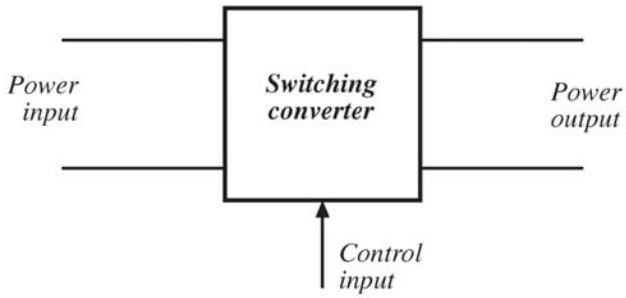

Dc-dc conversion:	Change and control voltage magnitude
Ac-dc rectification:	Possibly control dc voltage, ac current
Dc-ac inversion:	Produce sinusoid of controllable magnitude and frequency
Ac-ac cycloconversion:	Change and control voltage magnitude and frequency

Example Server Power Distribution

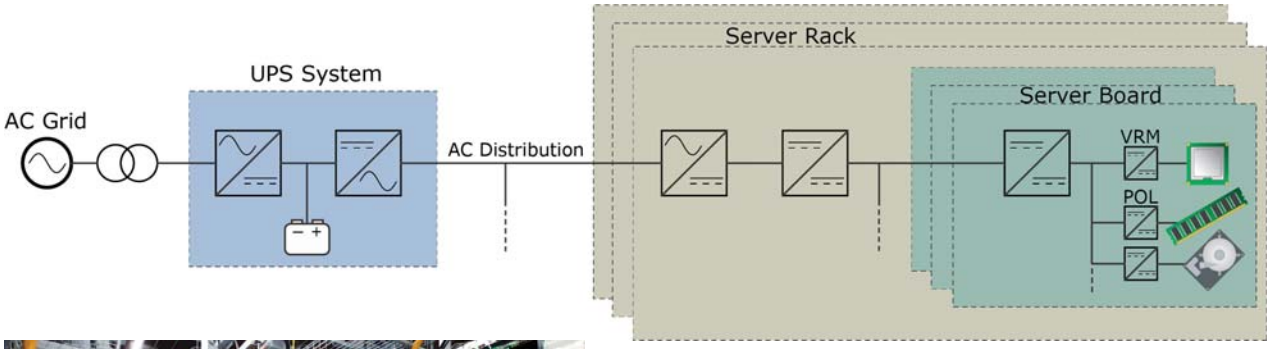

Example VRM Design

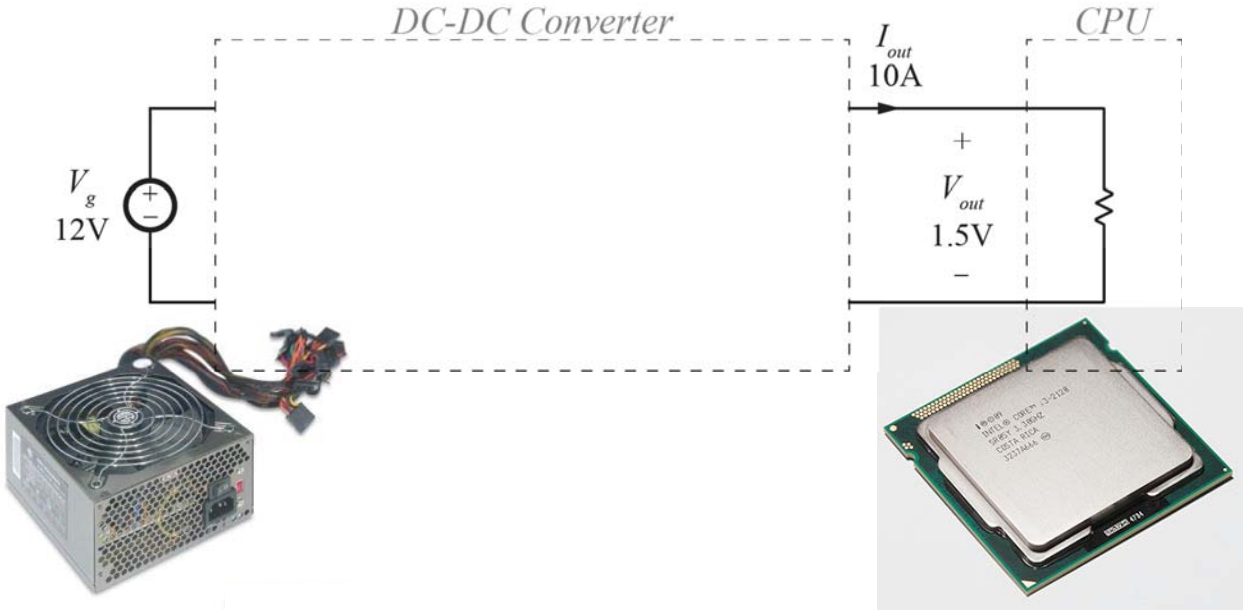

Example VRM Design

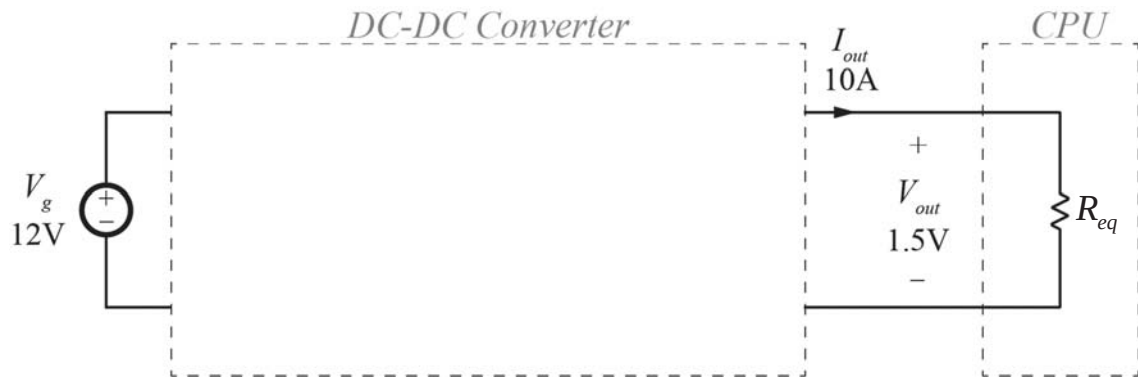

$$R_{eq} = \frac{V_{out}}{I_{out}} = 150m\Omega$$

Example VRM Design

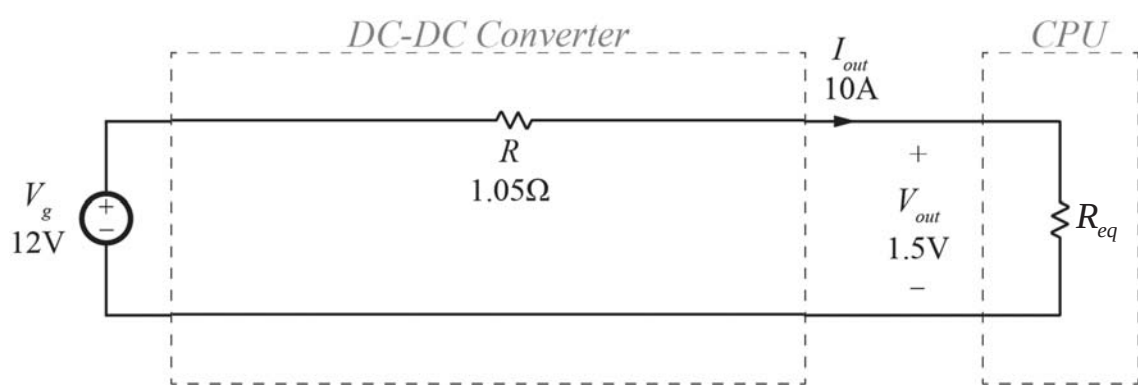

$$R_{eq} = \frac{V_{out}}{I_{out}} = 150m\Omega$$

$$V_{out} = V_g - I_{out}R$$

$$R = \frac{V_g - V_{out}}{I_{out}}$$

Variations in Load

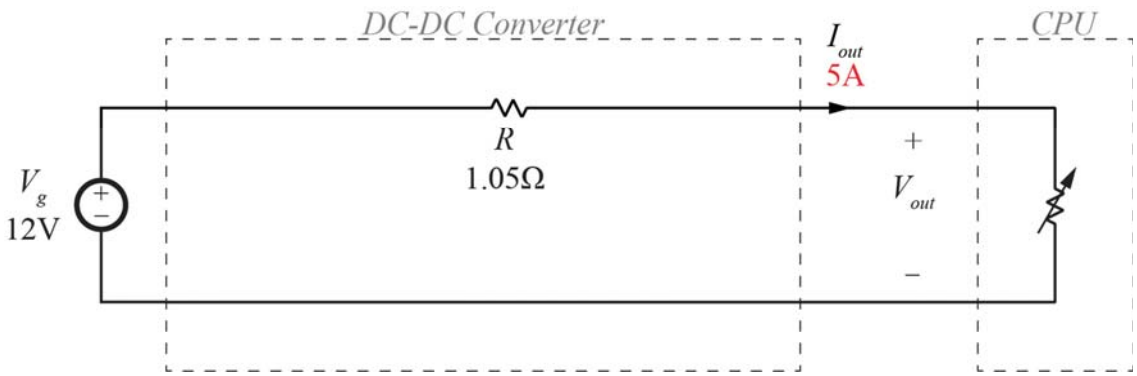

$$V_{out} = V_g - I_{out}R$$
$$V_{out} = 12\text{V} - (5\text{A})(1.05\Omega)$$
$$V_{out} = 6.75\text{V}$$

Control is Invariably Required

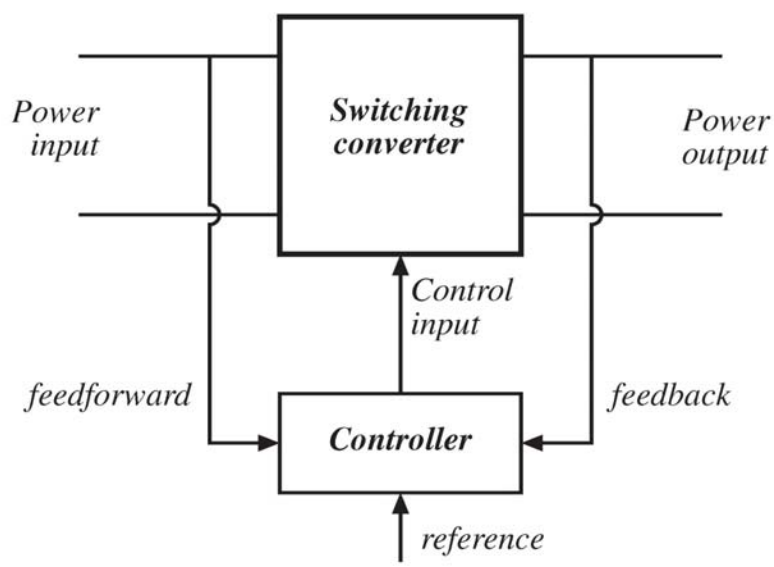

Linear Regulator

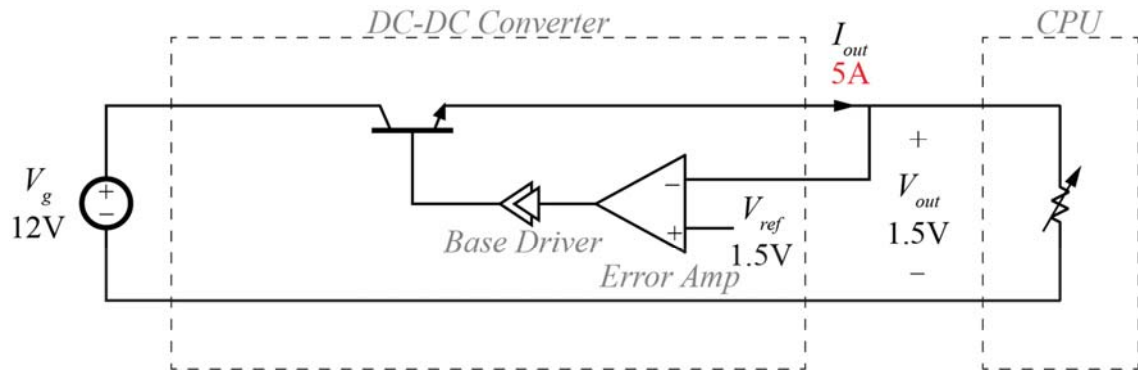

Linear Regulator

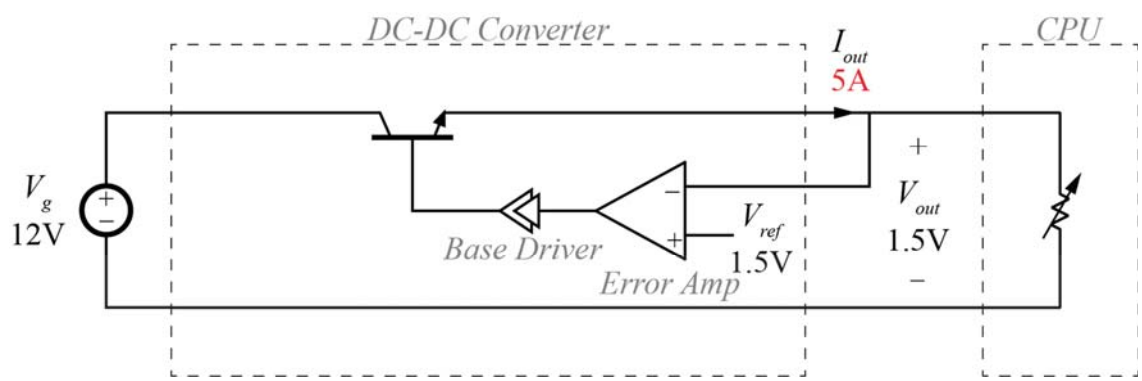

$$P_{in} = V_g I_g \approx V_g I_{out}$$

$$P_{in} = (5\text{A})(12\text{V})$$

$$P_{in} = 60\text{W}$$

$$P_{out} = V_{out} I_{out}$$

$$P_{out} = (5\text{A})(1.5\text{V})$$

$$P_{out} = 7.5\text{W}$$

$$\boxed{\eta = \frac{P_{out}}{P_{in}} = \frac{7.5\text{W}}{60\text{W}} = 12.5\%}$$

A High Efficiency Converter

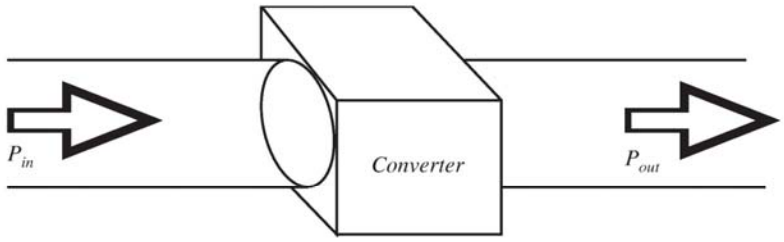

A goal of current converter technology is to construct converters of small size and weight, which process substantial power at high efficiency

Devices Available to the Circuit Designer

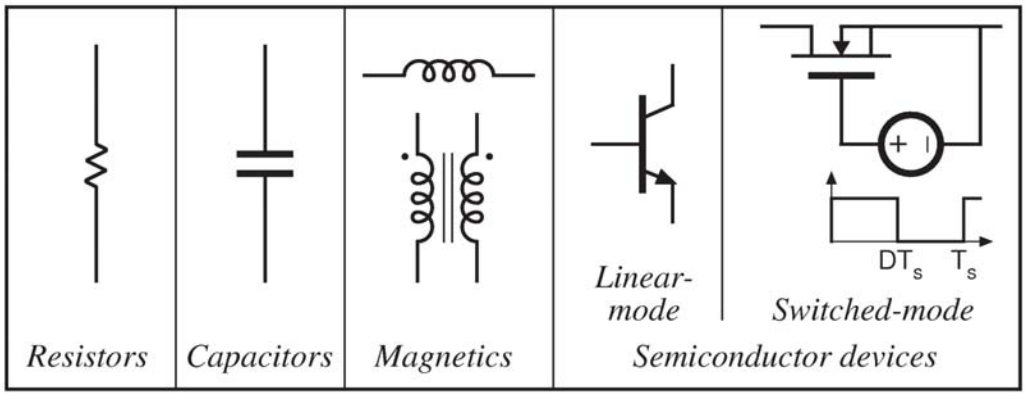

Devices Available to the Circuit Designer

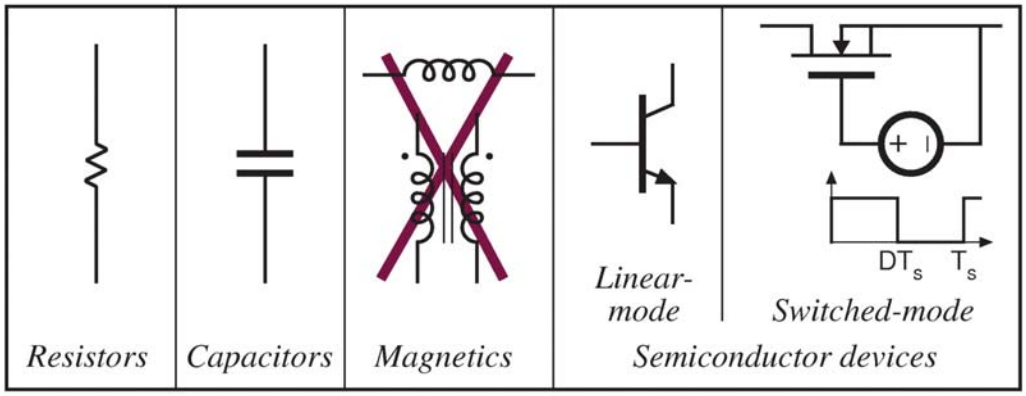

Signal processing: avoid magnetics

Devices Available to the Circuit Designer

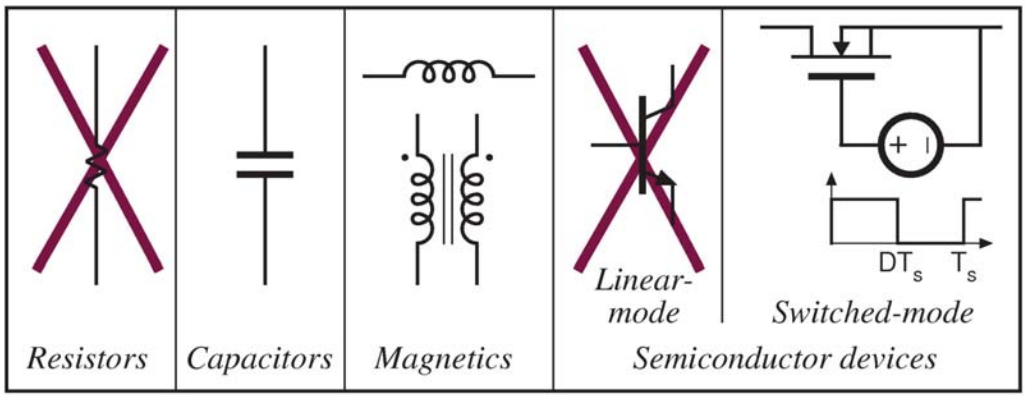

Power processing: avoid lossy elements

Power Loss in an Ideal Switch

Switch closed: $v(t) = 0$

Switch open: $i(t) = 0$

In either event: $p(t) = v(t)\, i(t) = 0$

Ideal switch consumes zero power

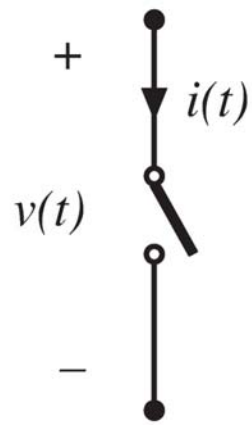

Use of SPDT Switch

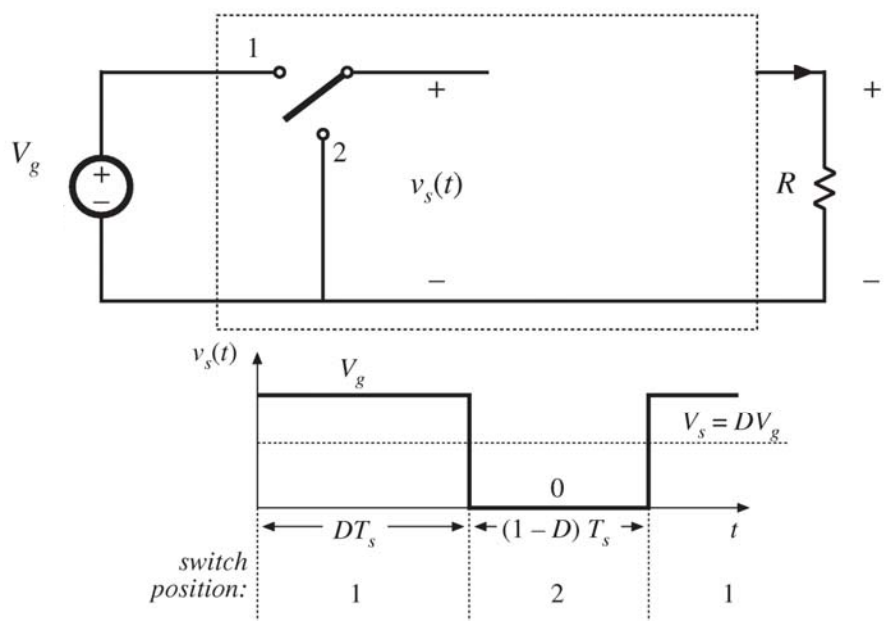

Controlling Duty Cycle

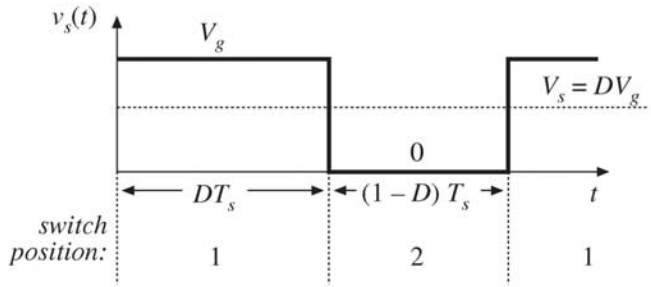

D = switch duty cycle
$0 \le D \le 1$

T_s = switching period

f_s = switching frequency
$= 1 / T_s$

DC component of $v_s(t)$ = average value:

$$V_s = \frac{1}{T_s}\int_0^{T_s} v_s(t)\,dt = DV_g$$

Addition of Low Pass Filter

Addition of (ideally lossless) L-C low-pass filter, for removal of switching harmonics:

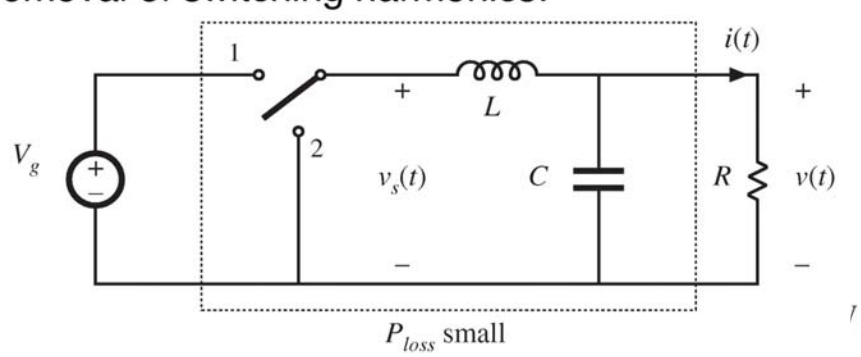

- Choose filter cutoff frequency f_0 much smaller than switching frequency f_s
- This circuit is known as the "buck converter"

Duty Cycle Control

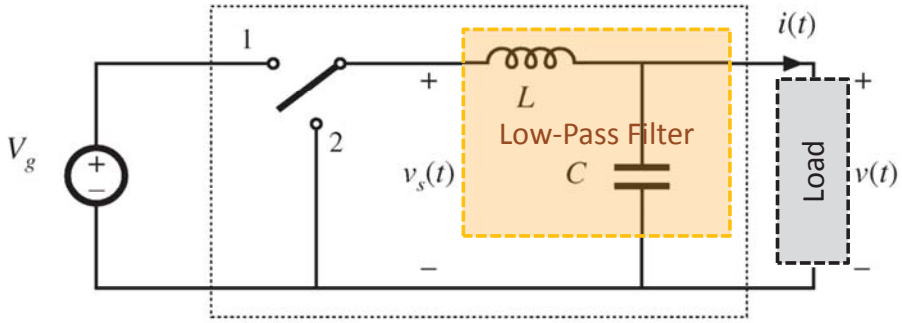

$$V_s = \frac{1}{T_s}\int_0^{T_s} v_s(t)\,dt = DV_g$$

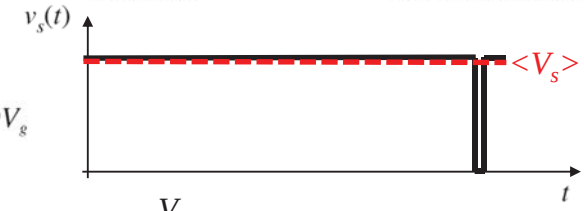

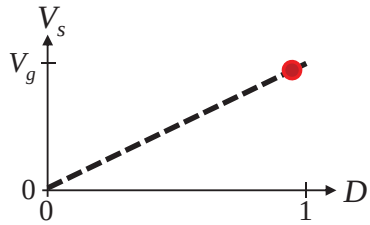

Control System for Voltage Regulation

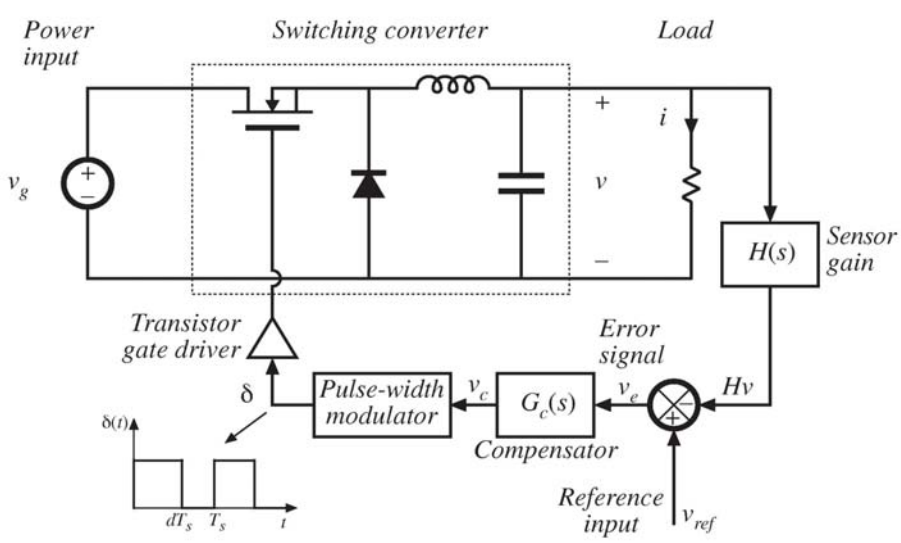

Dynamic Performance

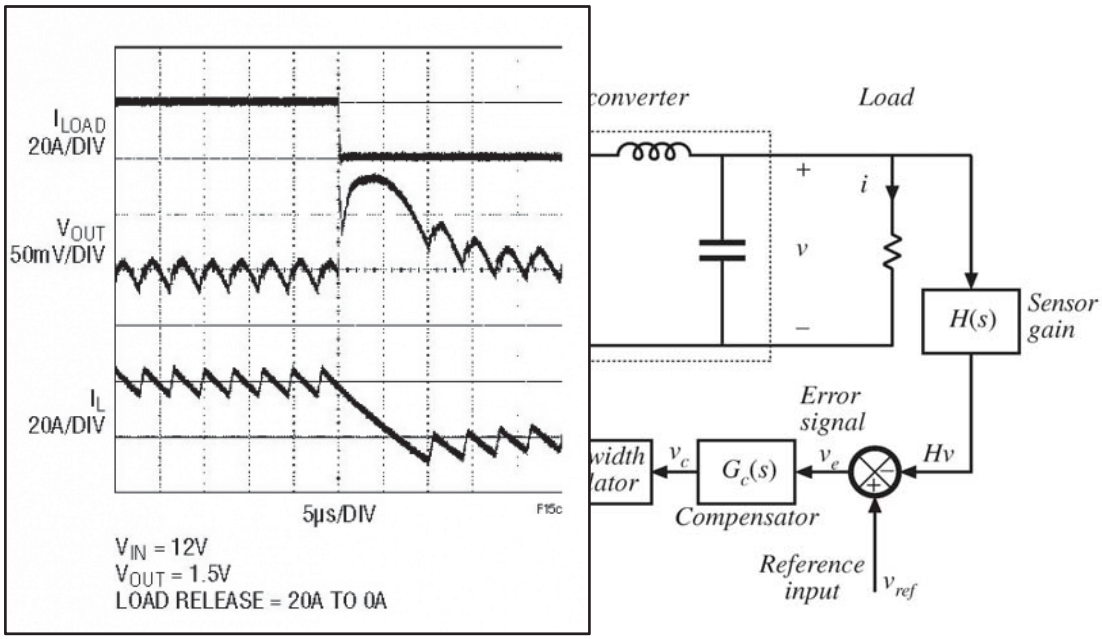

Single Phase Inverter

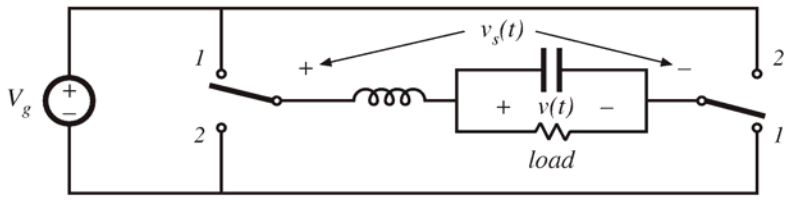

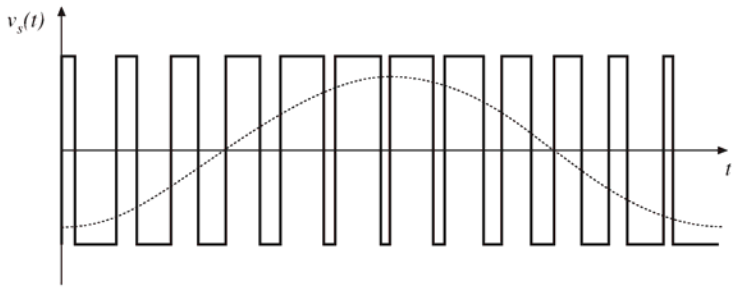

"H-bridge"

Modulate switch duty cycles to obtain sinusoidal low-frequency component

Power Electronics Overview

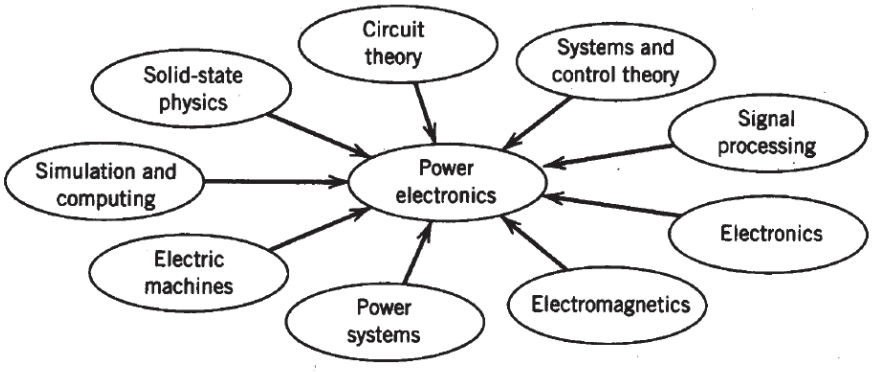

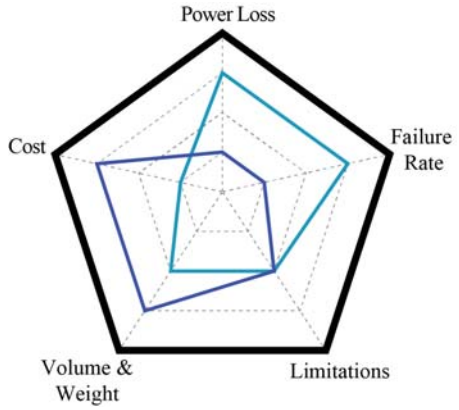

Some Power Electronics Applications

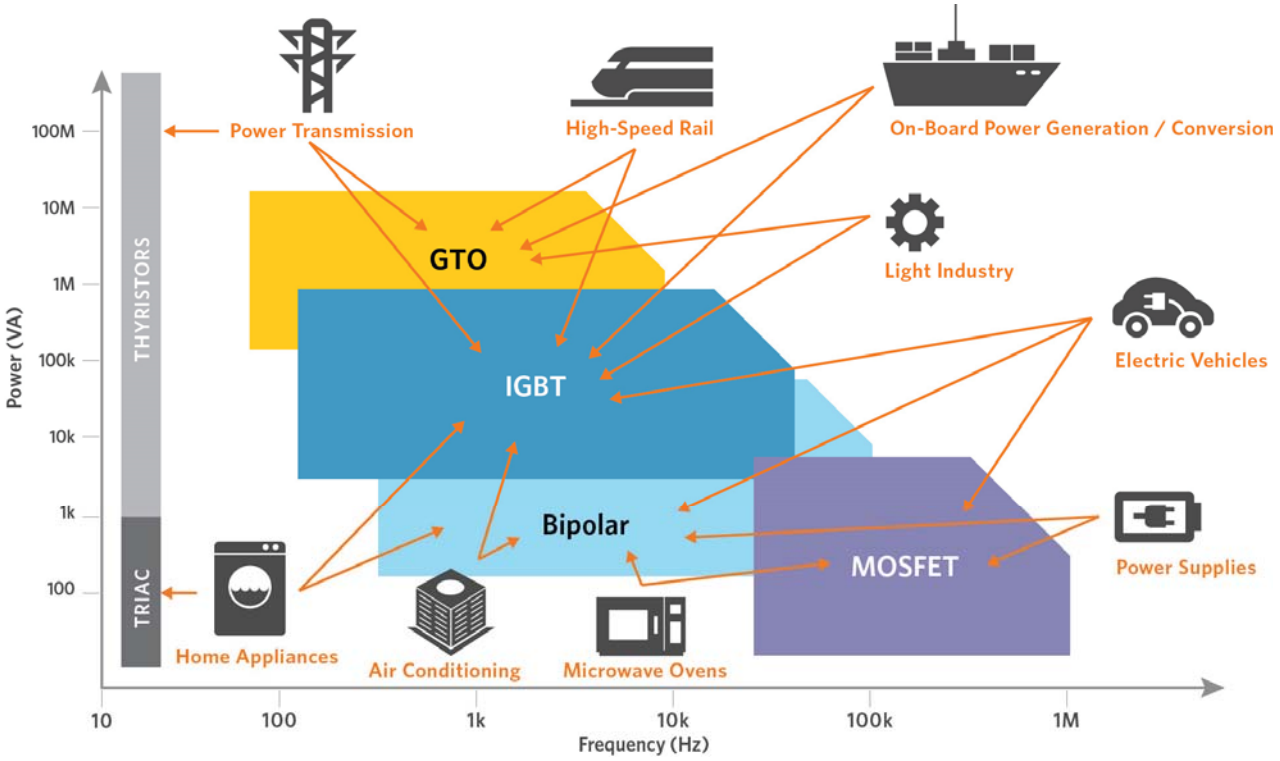

Power Transmission: Saturable Reactor

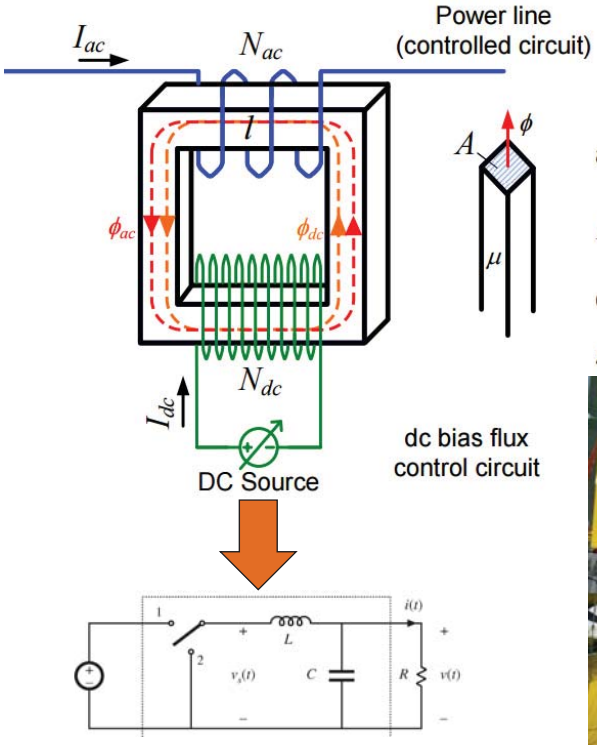

ac circuit inductance :

$$L_{ac} = \frac{\mu \cdot N_{ac}^2 \cdot A}{l} = const \cdot \mu$$

controlled by dc circuit current :

$$\mu = f(I_{dc})$$

EVs: Integrated Converter

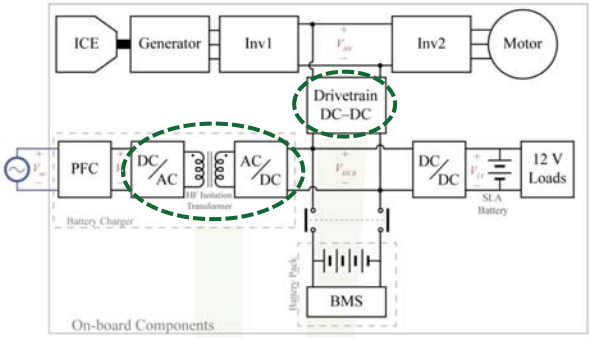

Traditional 2-stage drivetrain topology

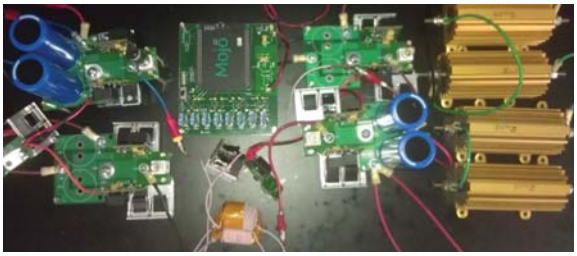

5kW Scaled-Down Converter Prototype

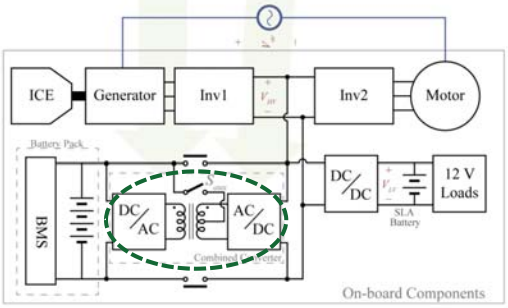

Combined isolated/non-isolated topology

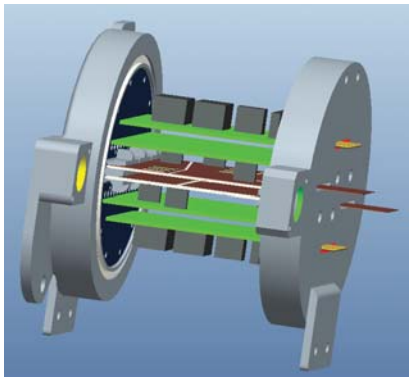

Full Power, 3D-Printed Module

Renewables: 2kW Power Dense Solar Inverter

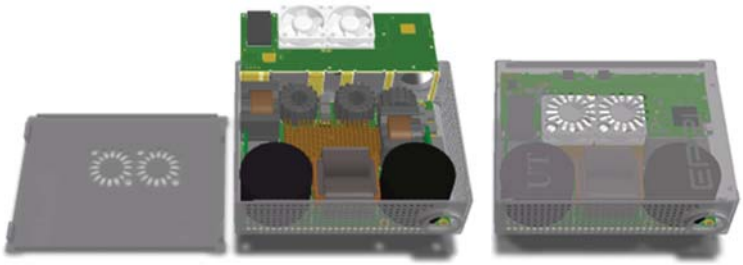

CAD Model of Power-Dense Design

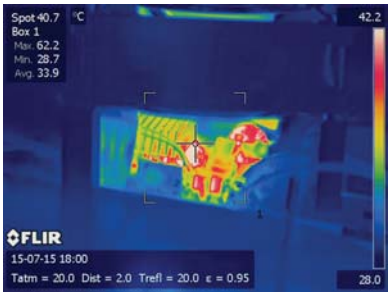

Thermal Test at Full Power

Protoype 2kW Solar Inverter

Commercial Product Size Comparison

Medical Devices: RF Energy Harvesting

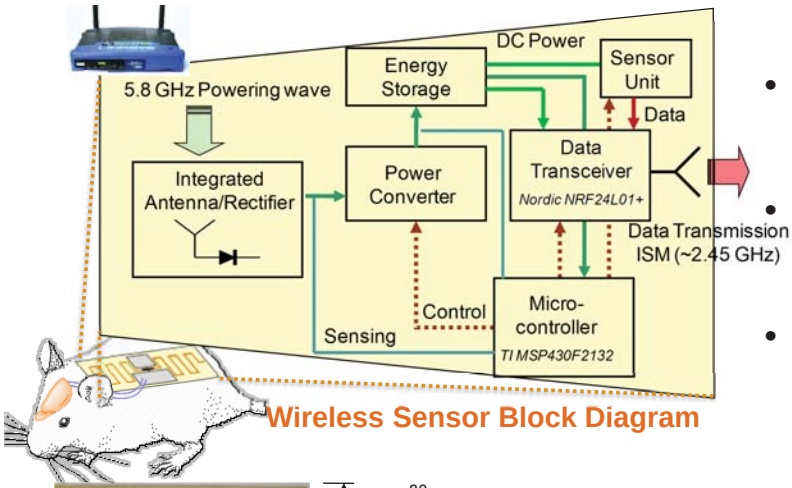

Wireless Sensor Block Diagram

- Powered entirely by commercial 5.8GHz WiFi adapter
- Able to operate with ~5µW power using only off-the-shelf components
- Able to operate down to 100nW using a custom IC

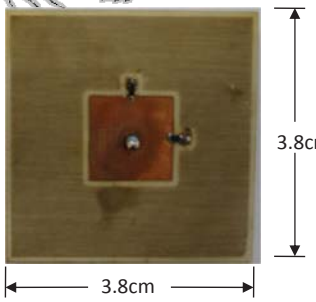

5.8 GHz patch rectenna

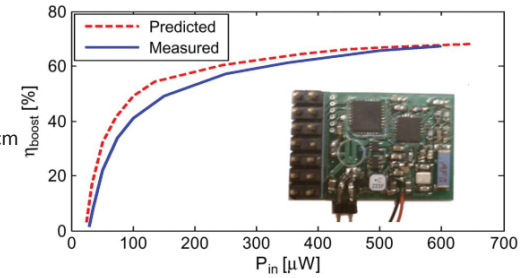

OTS Power Converter Design

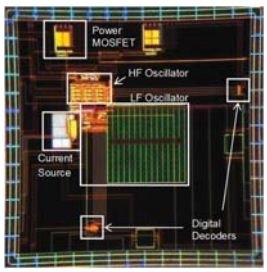

P_{out} (µW)	η_{boost} (%)
0.16	18.05
0.52	35.13
1.29	47.36
2.57	53.58
8.81	65.16
23.86	71.14
60.66	75.70
123.6	79.06

Custom harvester IC implementation

Popovic, Z.; Falkenstein, E.A.; Costinett, D.; Zane, R., "Low-Power Far-Field Wireless Powering for Wireless Sensors," *Proceedings of the IEEE* , vol.101, no.6, pp.1397,1409, June 2013
Paing, T.; Falkenstein, Erez; Zane, R.; Popovic, Z., "Custom IC for Ultralow Power RF Energy Scavenging," *Power Electronics, IEEE Transactions on* , vol.26, no.6, pp.1620,1626, June 2011

Mobile Electronics

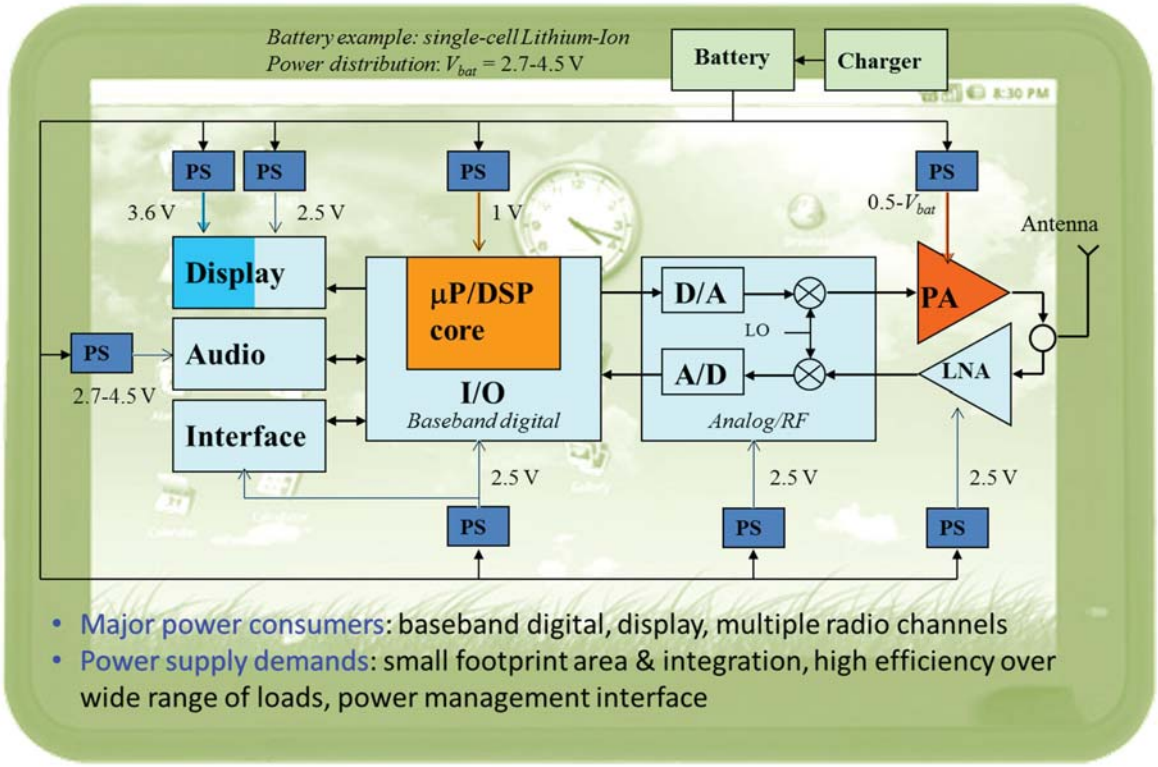

- Major power consumers: baseband digital, display, multiple radio channels
- Power supply demands: small footprint area & integration, high efficiency over wide range of loads, power management interface

Mobile Electronics

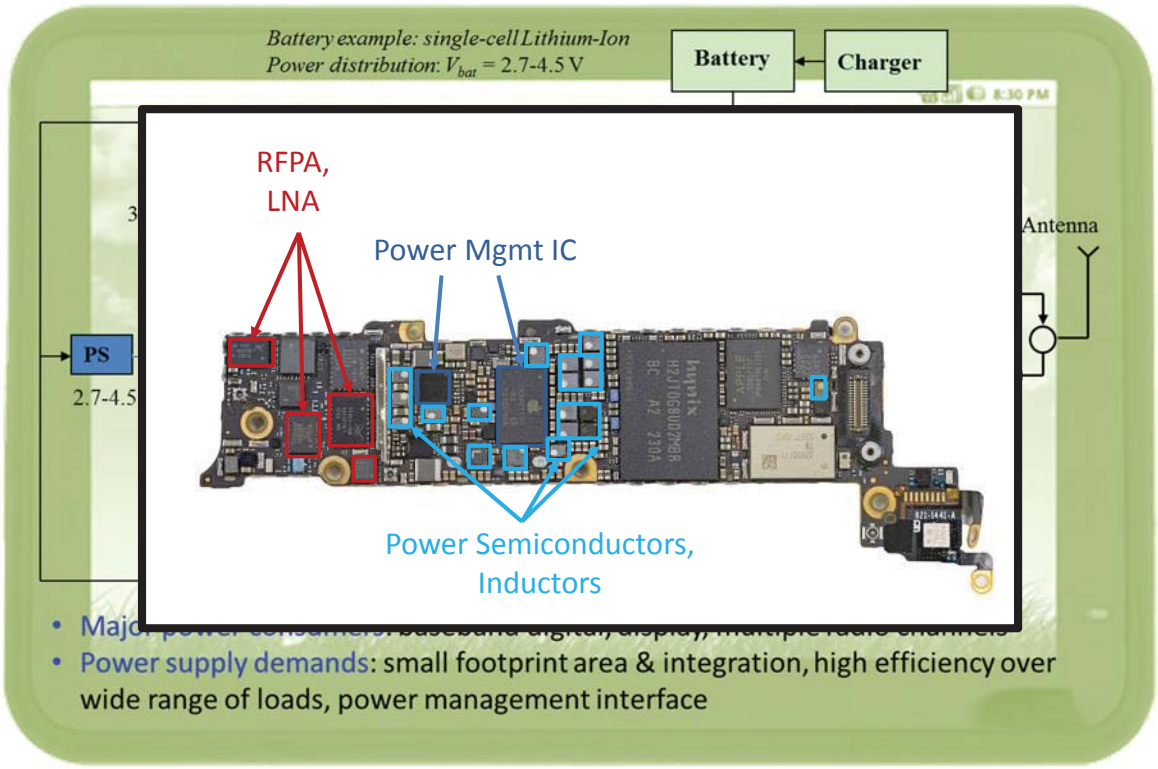

- Power supply demands: small footprint area & integration, high efficiency over wide range of loads, power management interface

Wearable Electronics: Medical Sensor

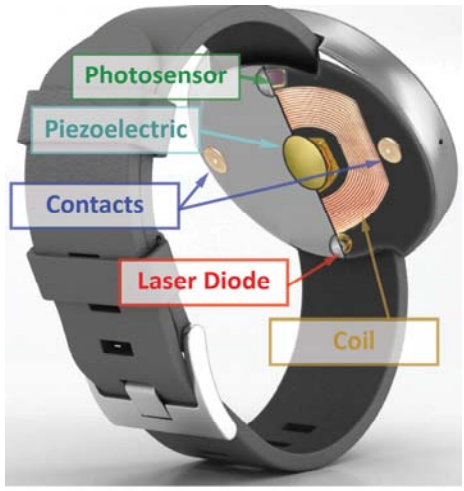

- Various biological markers can now be sensed through noninvasive methods
- Pulse, water content, GSR, blood glucose levels, oxygen content, etc.
- Precision integrated power electronics and low power circuit design techniques needed for future implementations

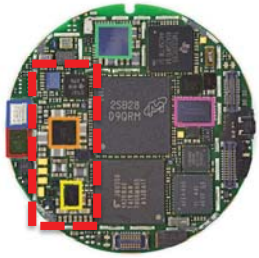

Part I: Converters in Equilibrium

2. Principles of steady state converter analysis
3. Steady-state equivalent circuit modeling, losses, and efficiency
4. Switch realization
5. The discontinuous conduction mode
6. Converter circuits

Part I: Converters in Equilibrium

Inductor waveforms

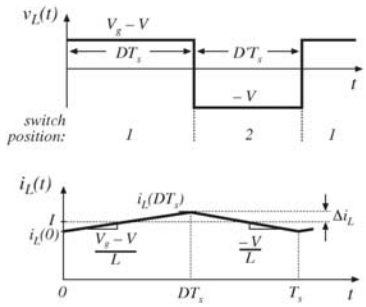

Averaged equivalent circuit

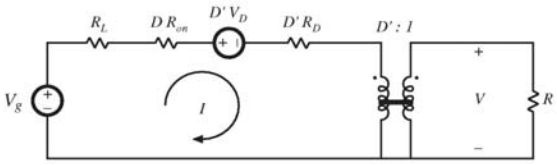

Predicted efficiency

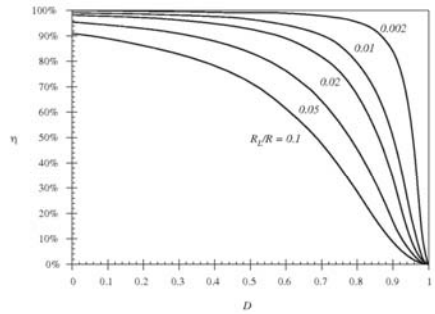

Discontinuous conduction mode

Transformer isolation

Switch Realization: Semiconductor Devices

The IGBT

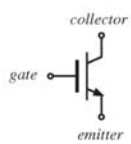

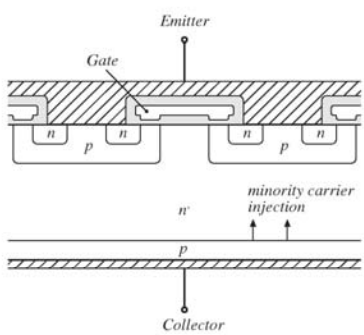

Switching loss

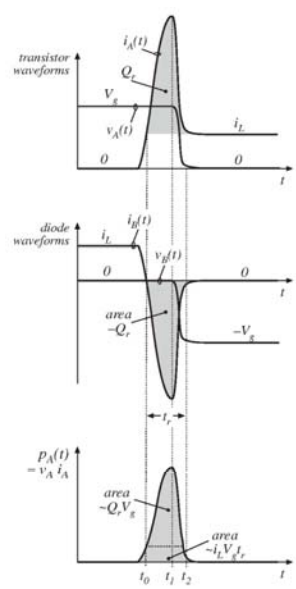

Part II: Converter Dynamics and Control

7. Ac modeling
8. Converter transfer functions
9. Controller design
10. Input filter design
11. Ac and dc equivalent circuit modeling of the discontinuous conduction mode
12. Current-programmed control

Part II: Converter Dynamics and Control

Closed-loop converter system

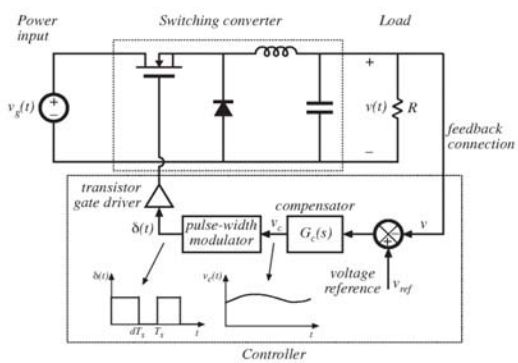

Averaging the waveforms

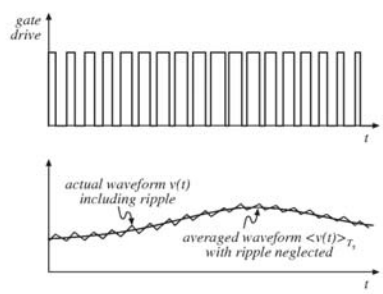

Small-signal averaged equivalent circuit

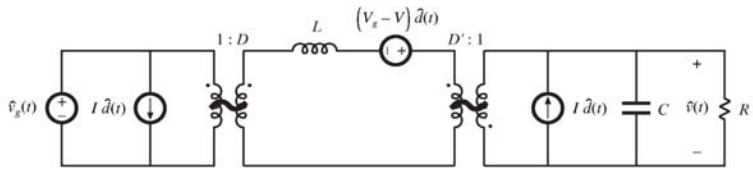

Part III: Magnetics

13. Basic magnetics theory
14. Inductor design
15. Transformer design

Part III: Magnetics

transformer design

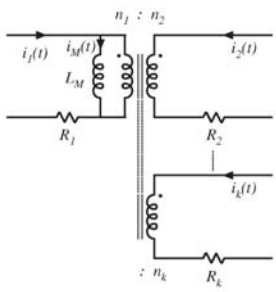

the proximity effect

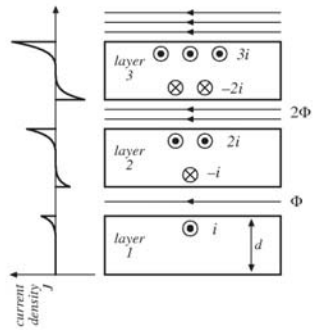

transformer size vs. switching frequency