Part II: Converter Dynamics and Control

7. AC equivalent circuit modeling
8. Converter transfer functions
9. Controller design
10. Input filter design
11. AC and DC equivalent circuit modeling of the discontinuous conduction mode
12. Current programmed control

Chapter 7: AC Equivalent Circuit Modeling

7.1: Introduction

Objective: maintain $v(t)$ equal to an accurate, constant value V.

There are disturbances:

- in $v_g(t)$
- in R

There are uncertainties:

- in element values
- in V_g
- in R

A simple dc-dc regulator system, employing a buck converter

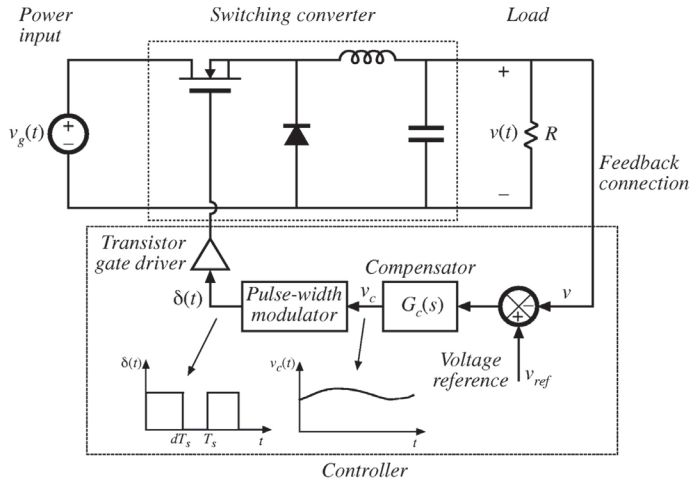

Control Objectives and Inputs

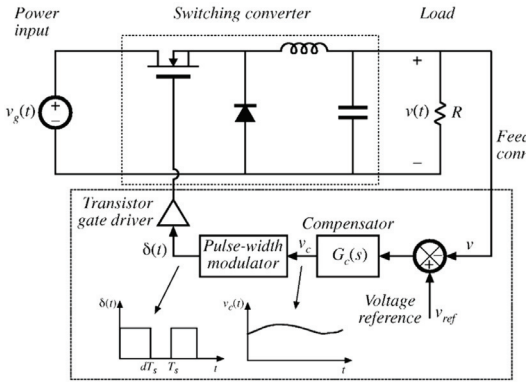

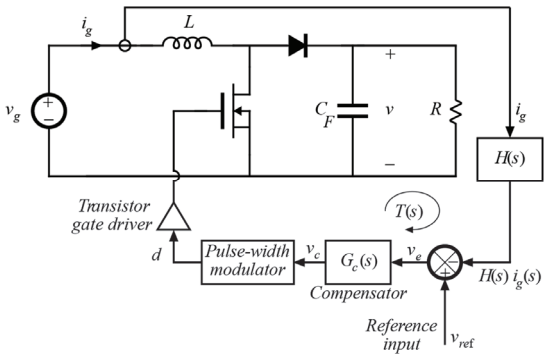

Objectives of Part II

Develop tools for modeling, analysis, and design of converter control systems

Need dynamic models of converters:

How do ac variations in $v_g(t)$, R, or $d(t)$ affect the output voltage $v(t)$?

What are the small-signal transfer functions of the converter?

- Extend the steady-state converter models of Chapters 2 and 3, to include CCM converter dynamics (Chapter 7)
- Construct converter small-signal transfer functions (Chapter 8)
- Design converter control systems (Chapter 9)
- Design input EMI filters that do not disrupt control system operation (Chapter 10)
- Model converters operating in DCM (Chapter 11)
- Current-programmed control of converters (Chapter 12)

PWM Spectrum

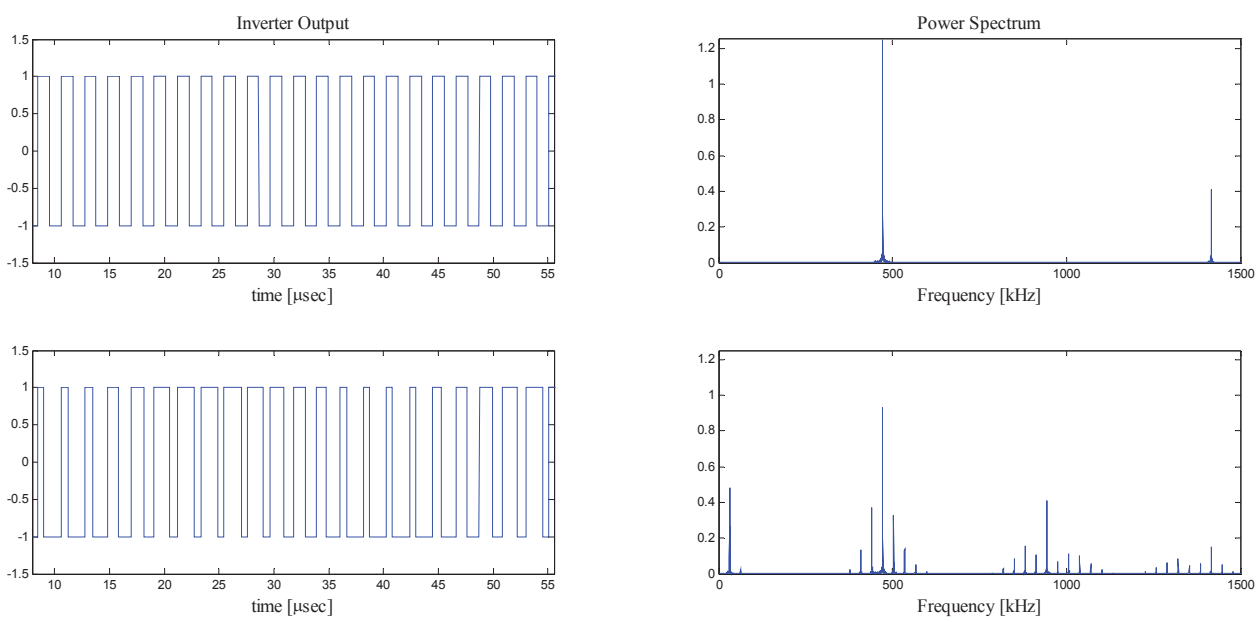

THE UNIVERSITY OF TENNESSEE KNOXVILLE

Neglecting The Switching Ripple

Suppose the duty cycle is modulated sinusoidally:

$$d(t) = D + D_m \cos \omega_m t$$

where D and D_m are constants, $|D_m| \ll D$, and the modulation frequency ω_m is much smaller than the converter switching frequency $\omega_s = 2\pi f_s$.

The resulting variations in transistor gate drive signal and converter output voltage:

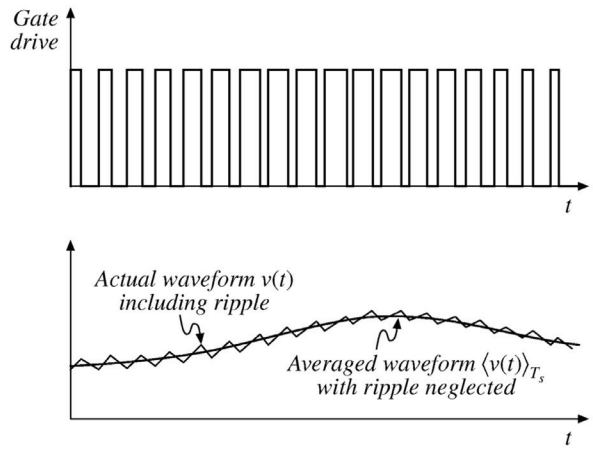

Output Voltage Spectrum

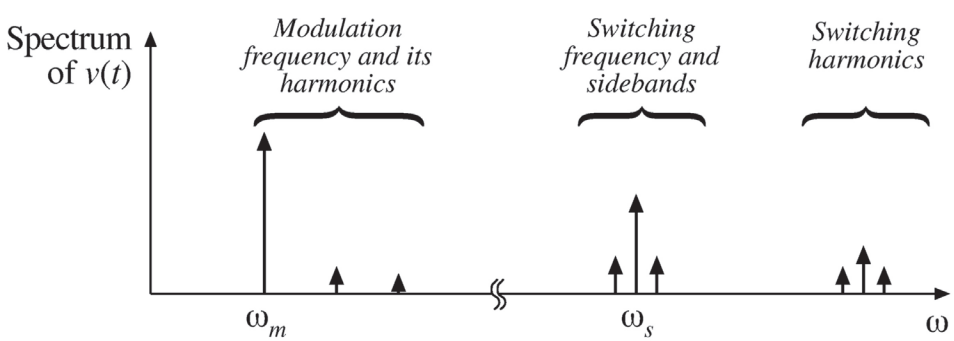

Contains frequency components at:

- Modulation frequency and its harmonics
- Switching frequency and its harmonics
- Sidebands of switching frequency

With small switching ripple, high-frequency components (switching harmonics and sidebands) are small.

If ripple is neglected, then only low-frequency components (modulation frequency and harmonics) remain.

Objectives of AC Modeling

- Predict how low-frequency variations in duty cycle induce low-frequency variations in the converter voltages and currents
- Ignore the switching ripple
- Ignore complicated switching harmonics and sidebands

Approach:

- Remove switching harmonics by averaging all waveforms over one switching period

Low-frequency Averaging

Average over one switching period to remove switching ripple:

$$L \frac{d\left\langle i_L(t)\right\rangle_{T_s}}{dt} = \left\langle v_L(t)\right\rangle_{T_s}$$

$$C \frac{d\left\langle v_C(t)\right\rangle_{T_s}}{dt} = \left\langle i_C(t)\right\rangle_{T_s}$$

where

$$\left\langle x(t)\right\rangle_{T_s} = \frac{1}{T_s}\int_t^{t+T_s} x(\tau)\,d\tau$$

Note that, in steady-state,

$$\left\langle v_L(t)\right\rangle_{T_s} = 0$$

$$\left\langle i_C(t)\right\rangle_{T_s} = 0$$

by inductor volt-second balance and capacitor charge balance.

Averaging in Steady-State

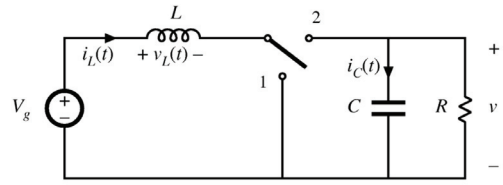

Averaging in Transient Operation

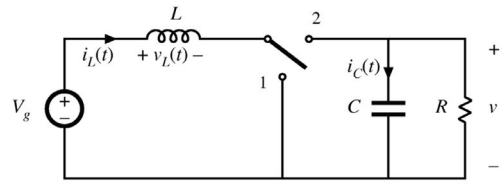

Averaging: Correct Prediction

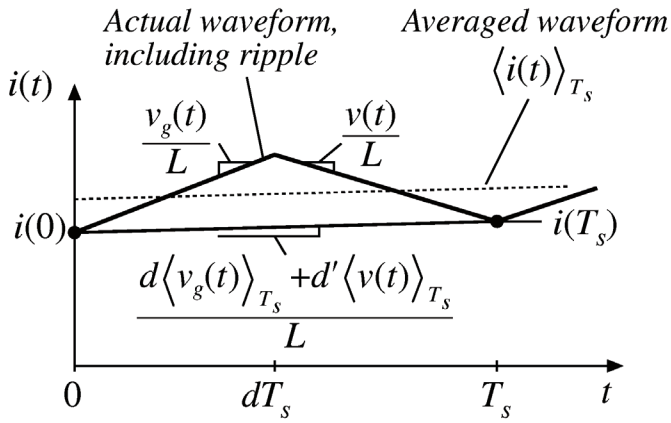

The net change in inductor current over one switching period is exactly equal to the period T_s multiplied by the average slope $\langle v_L \rangle_{T_s} / L$.

Averaging: Discussion

Small Signal Modeling: Linearization

THE UNIVERSITY OF TENNESSEE KNOXVILLE