Example Lag Compensator Design

original (uncompensated) loop gain is

$$T_u(s) = \frac{T_{u0}}{\left(1 + \frac{s}{\omega_0}\right)}$$

compensator:

$$G_c(s) = G_{c\infty}\left(1 + \frac{\omega_L}{s}\right)$$

Design strategy: choose

- $G_{c\infty}$ to obtain desired crossover frequency
- ω_L sufficiently low to maintain adequate phase margin

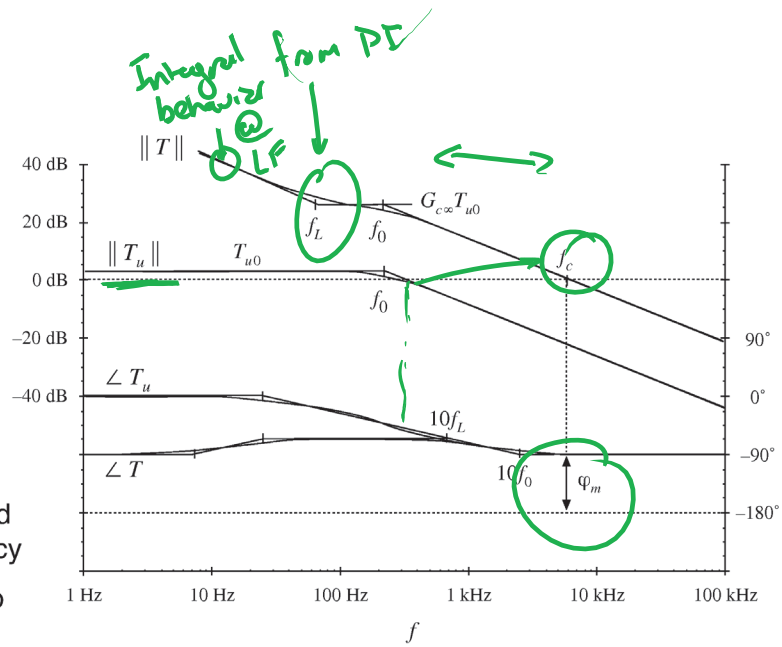

Lead (PD) Compensator

$$G_c(s) = G_{c0}\frac{\left(1 + \frac{s}{\omega_z}\right)}{\left(1 + \frac{s}{\omega_p}\right)}$$

Improves phase margin

$\omega_z < \omega_p$

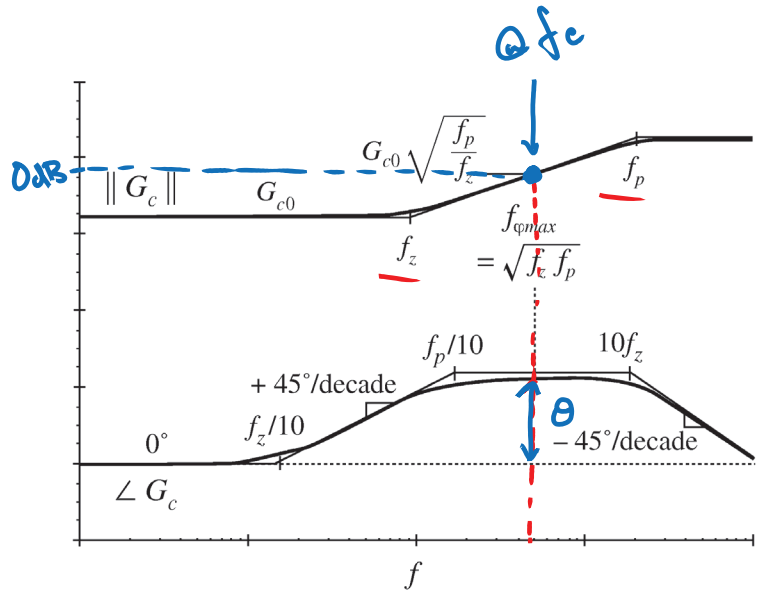

$\varphi_m = \varphi_{m\_old} + \theta$

Maximum Phase Lead

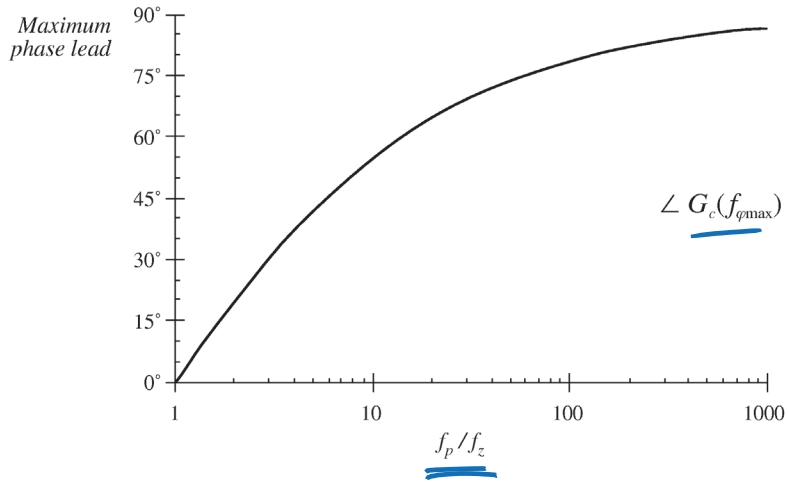

$$f_{\varphi\max} = \sqrt{f_z f_p}$$

$$\angle G_c(f_{\varphi\max}) = \tan^{-1}\left(\frac{\sqrt{\frac{f_p}{f_z}} - \sqrt{\frac{f_z}{f_p}}}{2}\right)$$

$$\frac{f_p}{f_z} = \frac{1 + \sin(\theta)}{1 - \sin(\theta)}$$

Lead Compensator Design

To optimally obtain a compensator phase lead of θ at frequency f_c, the pole and zero frequencies should be chosen as follows:

$$f_z = f_c \sqrt{\frac{1 - \sin(\theta)}{1 + \sin(\theta)}}$$

$$f_p = f_c \sqrt{\frac{1 + \sin(\theta)}{1 - \sin(\theta)}}$$

If it is desired that the magnitude of the compensator gain at f_c be unity, then G_{c0} should be chosen as

$$G_{c0} = \sqrt{\frac{f_z}{f_p}}$$

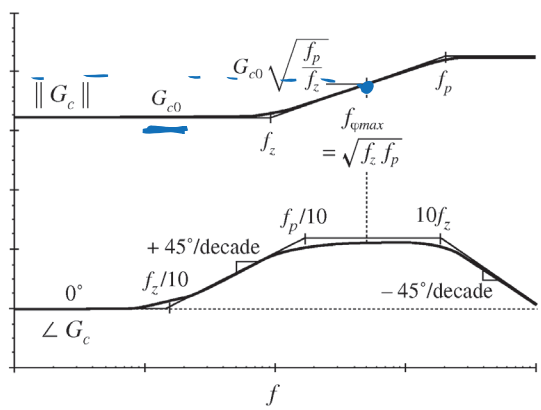

Example Lead Compensator Design

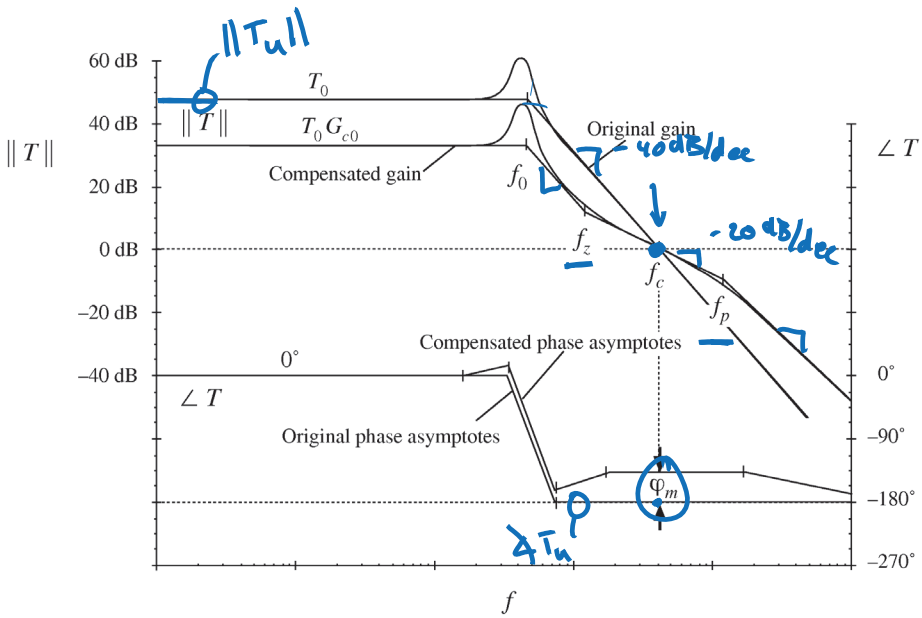

Combined (PID) Compensator

$$G_c(s) = G_{cm} \frac{\left(1 + \frac{\omega_L}{s}\right)\left(1 + \frac{s}{\omega_z}\right)}{\left(1 + \frac{s}{\omega_{p1}}\right)\left(1 + \frac{s}{\omega_{p2}}\right)}$$

PI PD

Extra(?) HF pole

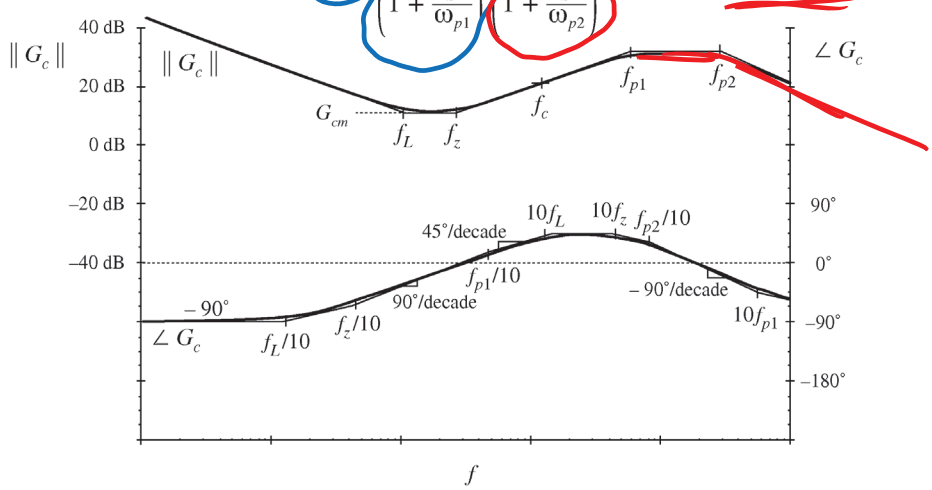

Example Design of Buck Compensator

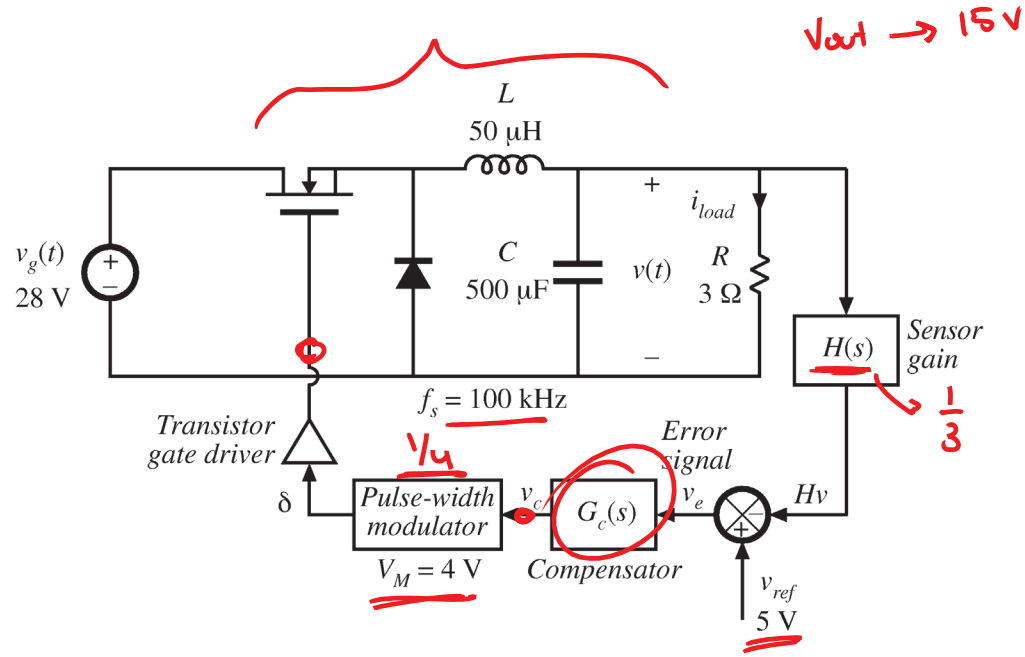

DC (Quiescent) Operating Point

Input voltage	$V_g = 28\text{V}$
Output	$V = 15\text{V}$, $I_{load} = 5\text{A}$, $R = 3\Omega$
Quiescent duty cycle	$D = 15/28 = 0.536$
Reference voltage	$V_{ref} = 5\text{V}$
Quiescent value of control voltage	$V_c = DV_M = 2.14\text{V}$
Gain $H(s)$	$H = V_{ref}/V = 5/15 = 1/3$

AC Power Stage Model

Table 7.1

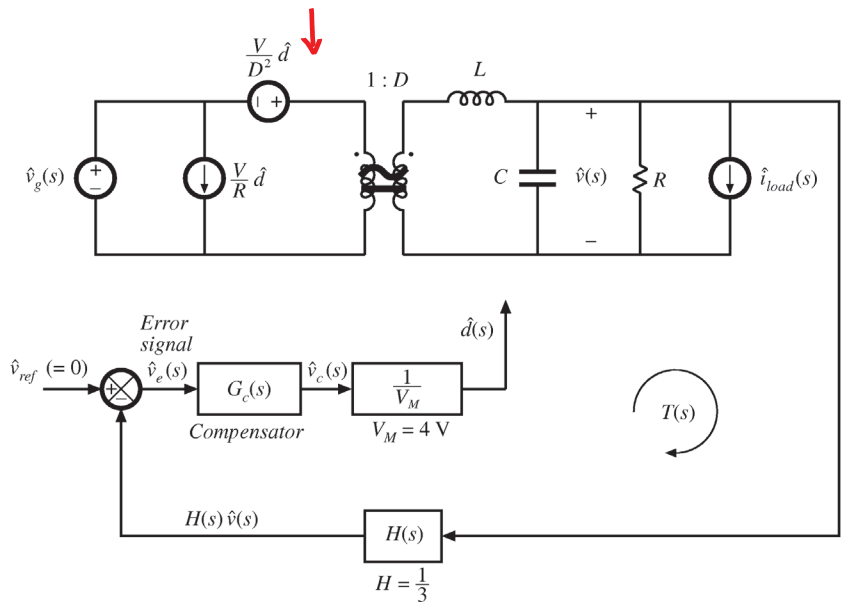

System Block Diagram

$\hat{v} = \hat{v}_{ref}\frac{1}{H}\frac{T}{1+T} + \hat{v}_g G_{vg}\frac{1}{1+T} - \hat{i}_{load} Z_{out}\frac{1}{1+T}$

$$T(s) = G_c(s)\left(\frac{1}{V_M}\right)G_{vd}(s)\,H(s)$$

$$T(s) = \frac{G_c(s)\,H(s)}{V_M}\left(\frac{V}{D}\,\frac{1}{1+\frac{s}{Q_0\omega_0}+\left(\frac{s}{\omega_0}\right)^2}\right)$$

first $G_c = 1$ (uncompensated)

disturbances

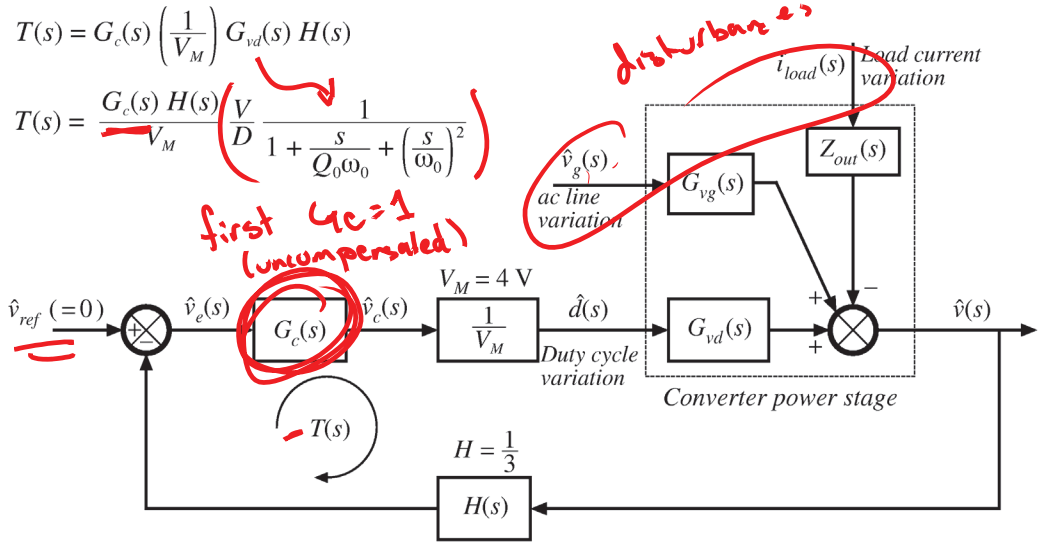

Plotting Uncompensated Loop Gain

(1) φ_m too low → ringing, overshoot → PD compensator

(2) LF gain too low → significant SS error → PI

(3) $f_c \approx$ ok

→ can improve bandwidth by increasing (P)

With $G_c = 1$, the loop gain is

$$T_u(s) = T_{u0} \frac{1}{1 + \frac{s}{Q_0 \omega_0} + \left(\frac{s}{\omega_0}\right)^2}$$

$$T_{u0} = \frac{H\,V}{D\,V_M} = 2.33 \Rightarrow 7.4\text{dB}$$

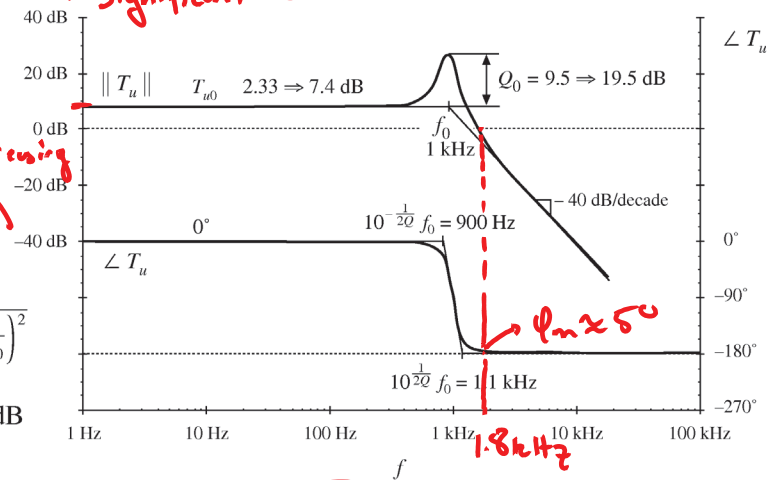

$f_c = 1.8$ kHz, $\varphi_m = 5°$

LTSpice Simulation – AC, Uncompensated

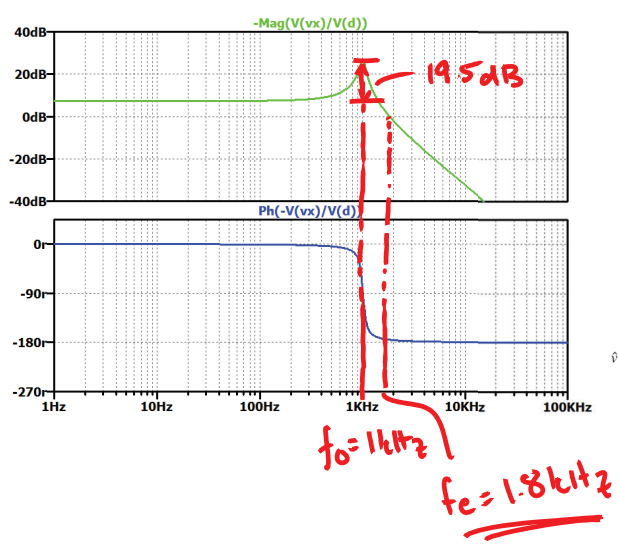

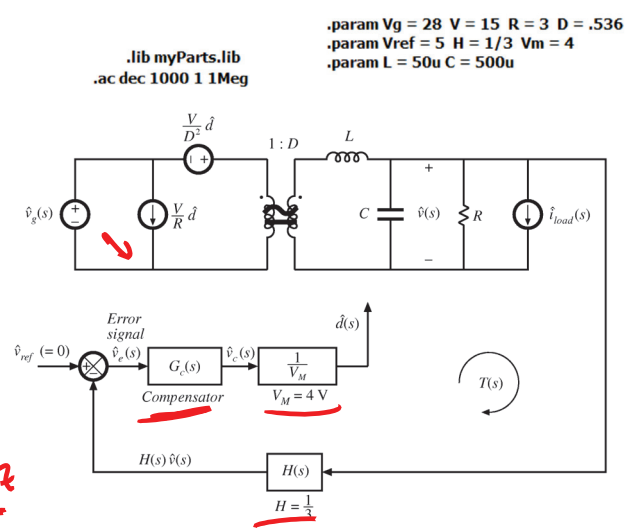

Transient Simulation, Uncompensated

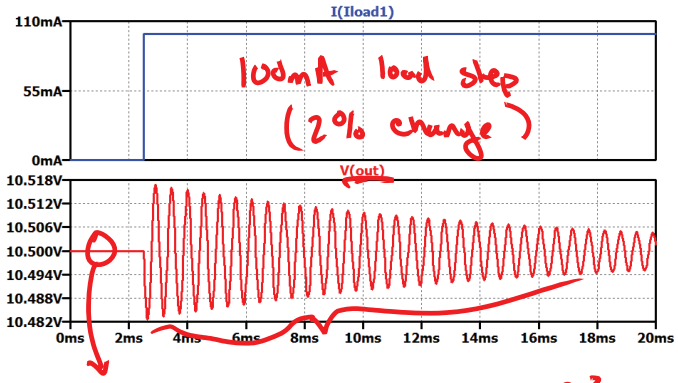

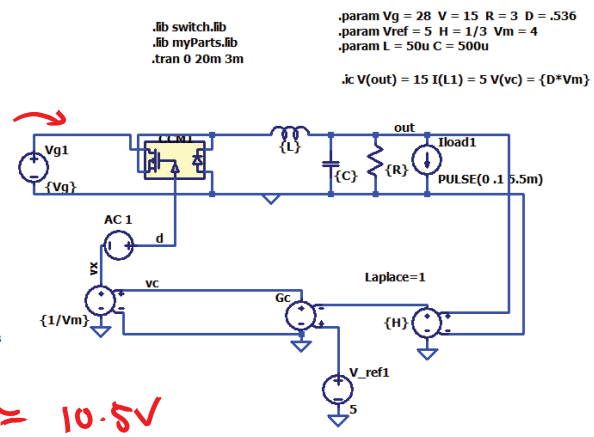

$$v = \frac{v_{ref}}{H}\,\frac{\|T_0\|}{1+\|T_0\|} = (15V)\,\frac{2.3}{1+2.3} \approx 10.5V$$

Ringing Frequency

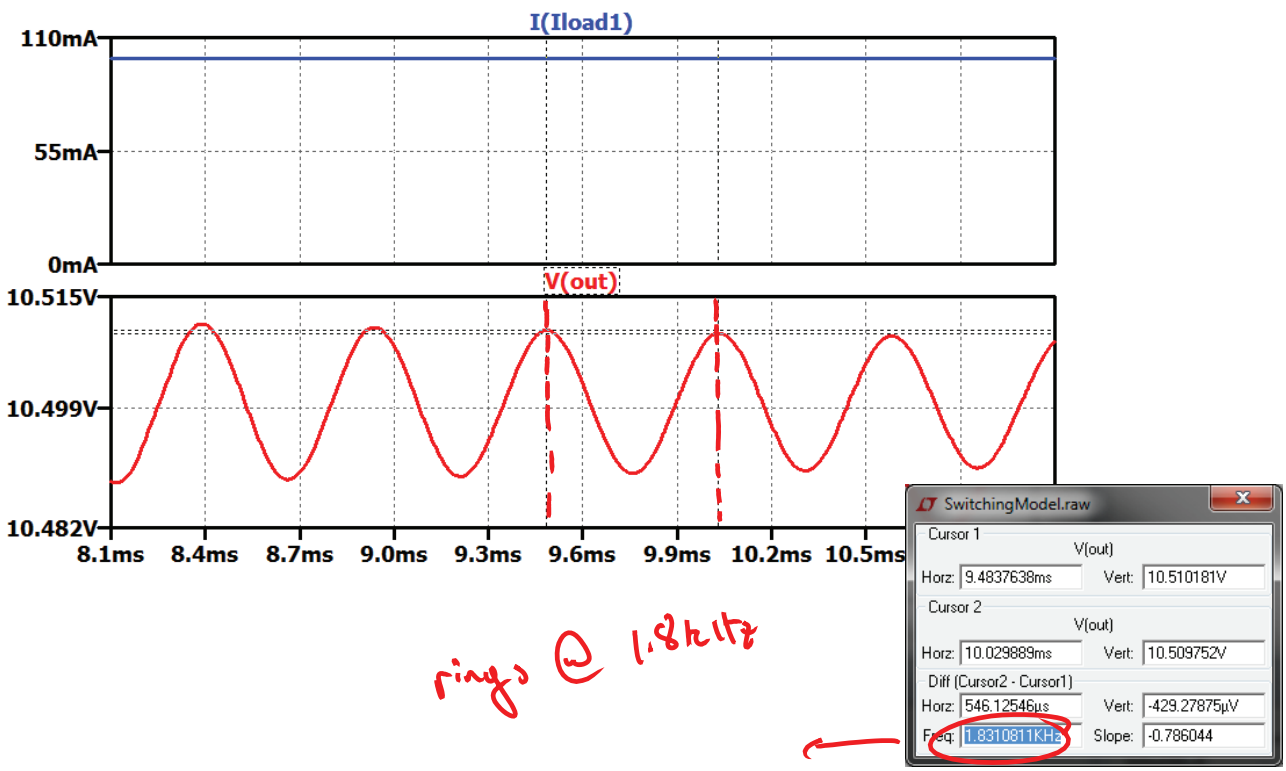

rings @ 1.8kHz

$T/(1+T)$

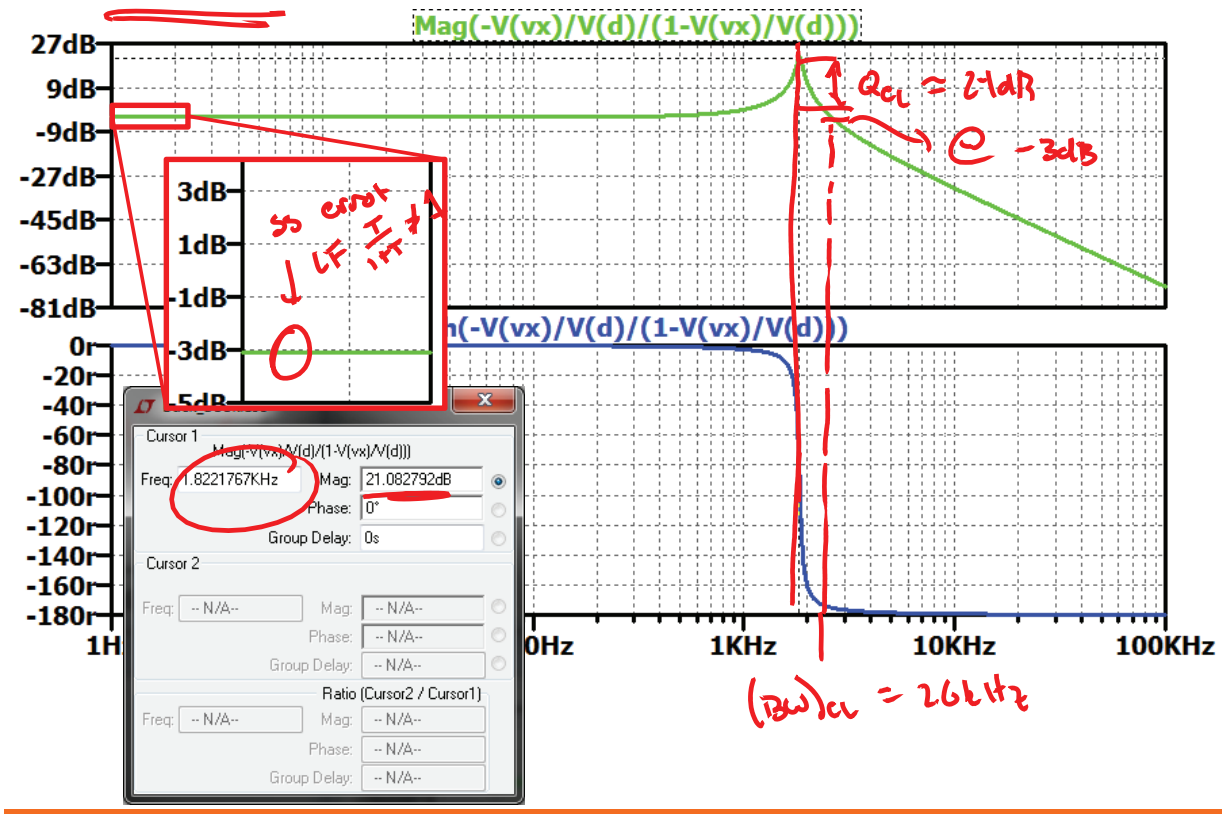

Summary: Uncompensated Behavior

- Significant steady-state error
  - Need to increase low-frequency gain
- Barely stable; significant ringing
  - Need to increase ϕ_m
- Speed: ok
  - f_c = 1.8 kHz
  - $(BW)_{CL}$ = 2.6 kHz
  - OK for $f_s \approx$ 10 kHz or above

Compensator Design

- As an example, try to
  - Increase f_c to 10 kHz
  - Increase ϕ_m to 76° (Q_{CL}=0.5)
  - Increase $\|T_0\|$ to ∞

- Note: Book Chooses f_c = 5 kHz and ϕ_m =52° (Q=0.5)

PI Design

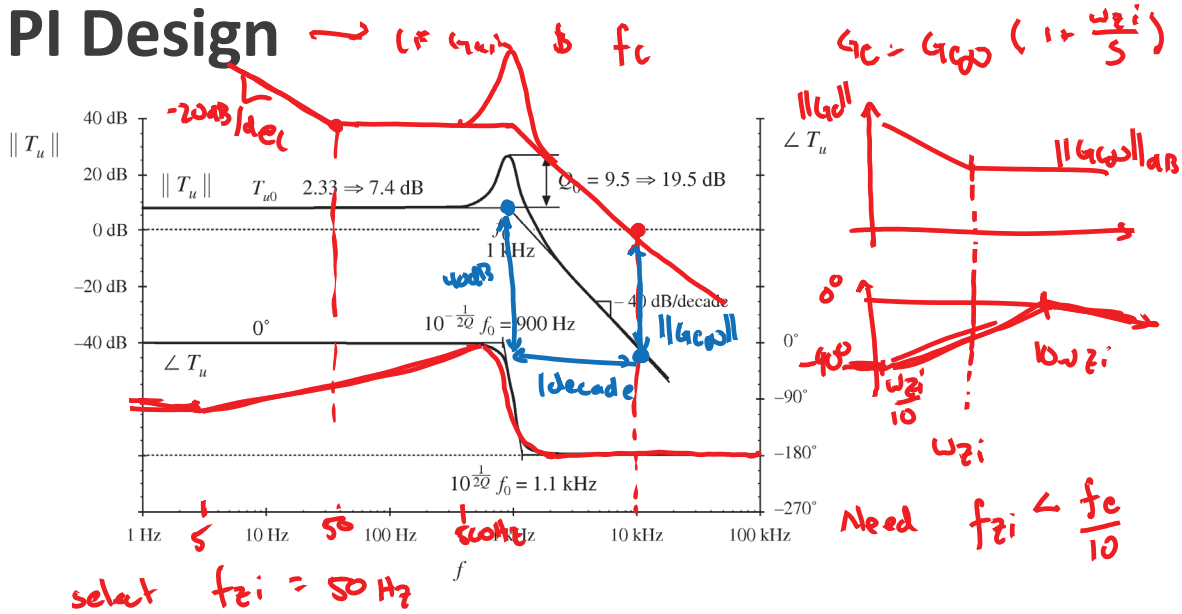

$G_c = G_{c0}\left(1 + \frac{\omega_{zi}}{s}\right)$

Need $f_{zi} < \frac{f_c}{10}$

select f_{zi} = 50 Hz

$\|G_{c0}\|_{dB}$ = 40dB − 7.4 dB = 32.6 B = 42.6

PI compensator $\boxed{G_{c,PI} = 42.6\left(1 + \frac{2\pi\, 50\,Hz}{s}\right)}$

PI Simulation

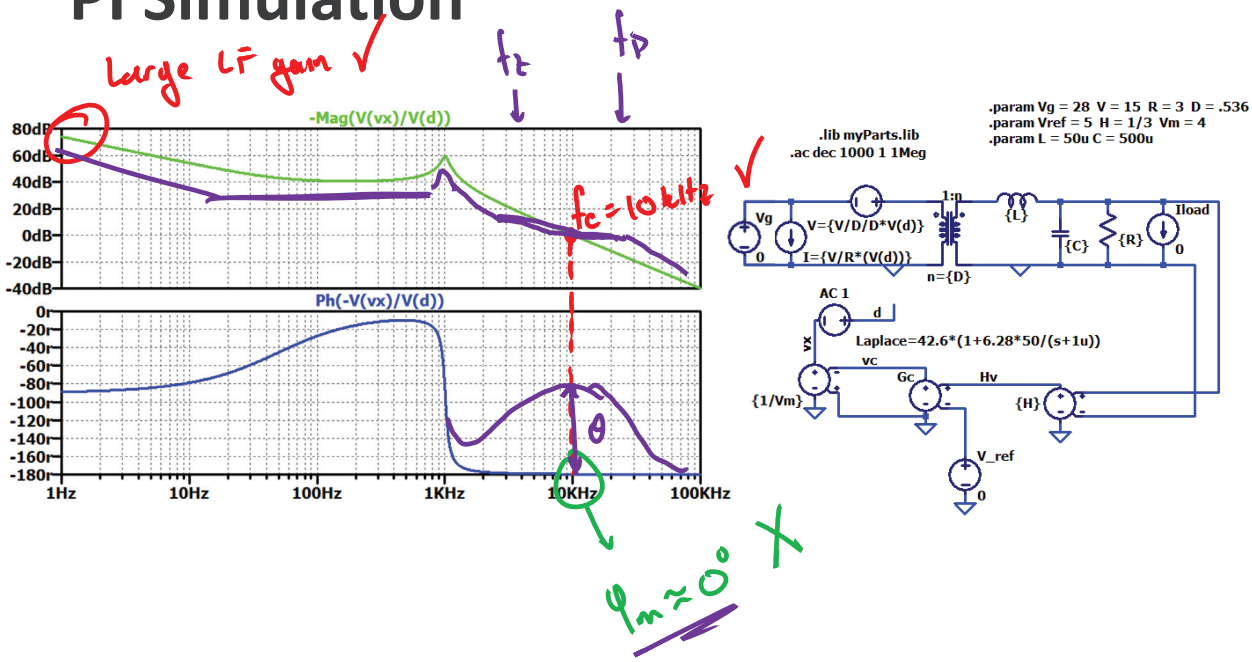

PD Design

$$f_z = f_c \sqrt{\frac{1-\sin(\theta)}{1+\sin(\theta)}}$$

$$f_p = f_c \sqrt{\frac{1+\sin(\theta)}{1-\sin(\theta)}}$$

$$G_{c0} = \sqrt{\frac{f_z}{f_p}}$$

$\varphi_{m\_now} = 0^\circ$

$\varphi_m = \theta + \varphi_{m\_now} = 76^\circ$

need $\theta = 76^\circ$

$f_c = 10\,kHz$

$f_z = 1.23\,kHz$

$f_p = 81\,kHz$

$G_{c0} = 0.12$

$$G_{c,PD} = G_{c0} \frac{\left(1+\frac{s}{\omega_z}\right)}{\left(1+\frac{s}{\omega_p}\right)}$$

PID Simulation

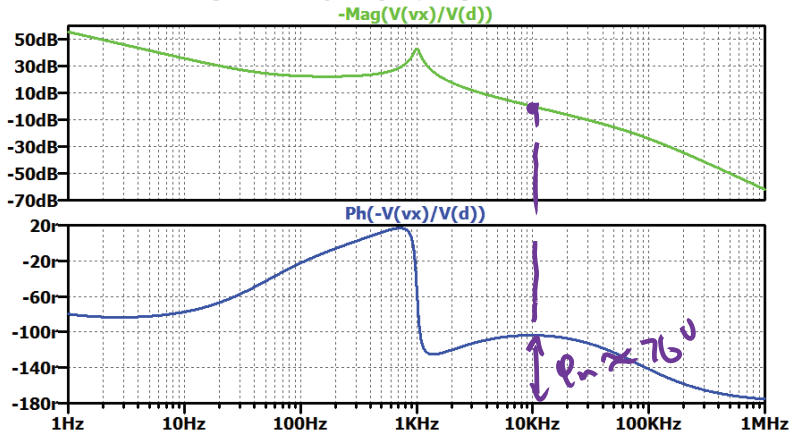

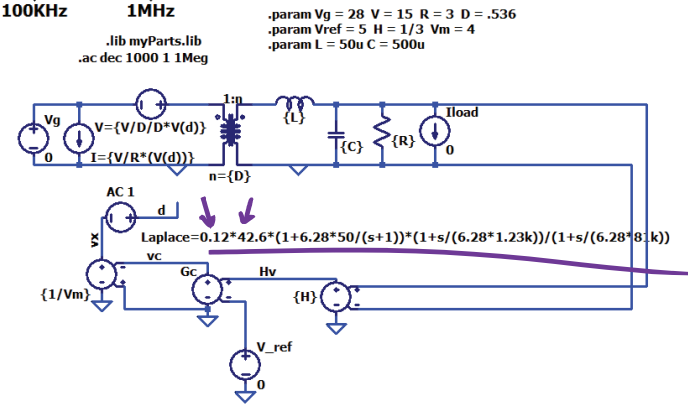

T/(1+*T*)

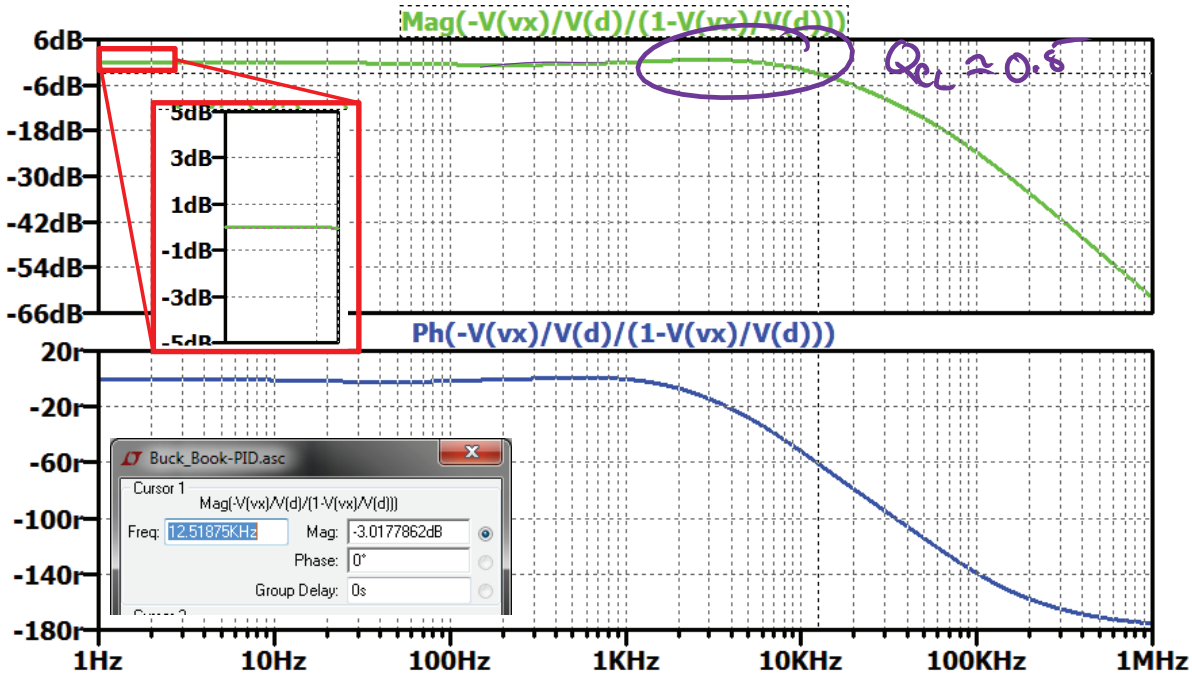

Transient Simulation

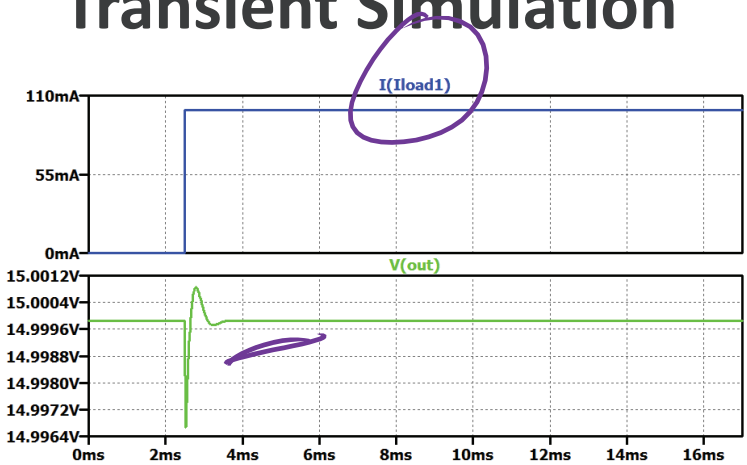


```
.lib switch.lib
.lib myParts.lib
.tran 0 20m 3m
```

```
.param Vg = 28  V = 15  R = 3  D = .536
.param Vref = 5  H = 1/3  Vm = 4
.param L = 50u C = 500u

.ic V(out) = 15 I(L1) = 5 V(vc) = {D*Vm}
```