Simplification

$$J = \frac{2F}{\pi} m_1 \qquad \alpha = \pi - 2\tan^{-1}\left(\frac{J_1}{m_1}\right)$$

$$\frac{\pi}{F} = \alpha + \beta \qquad \beta = 2\tan^{-1}\left(\frac{J_1}{2+m_1}\right)$$

$$\tan\left(\frac{\beta}{2}\right)(2+m_1) = J_1$$

$$\tan\left(\frac{-\alpha+\pi}{2}\right) = \frac{J_1}{m_1} = \frac{2+m_1}{m_1}\tan\frac{\beta}{2}$$

$$m_1 \tan\left(\frac{\pi-\alpha}{2}\right) = 2\tan\frac{\beta}{2} + m_1\tan\frac{\beta}{2}$$

$$m_1 = \frac{2\tan\frac{\beta}{2}}{\tan\left(\frac{\pi-\alpha}{2}\right) - \tan\frac{\beta}{2}}$$

$$\boxed{J = \frac{2F}{\pi}\,\frac{2\tan\frac{\beta}{2}}{\tan\left(\frac{\pi}{2} - \frac{\pi}{2F} + \frac{\beta}{2}\right) - \tan\frac{\beta}{2}}}$$

SRC Control Trajectory

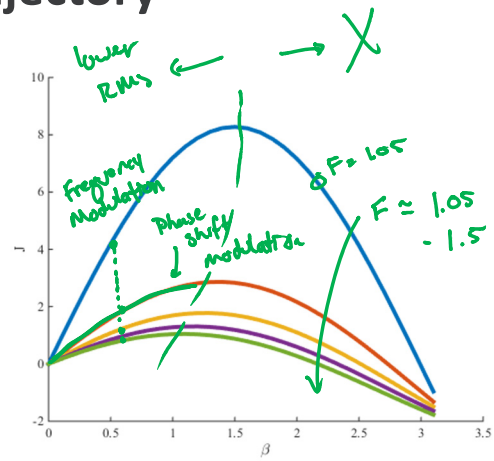

SRC Simulation

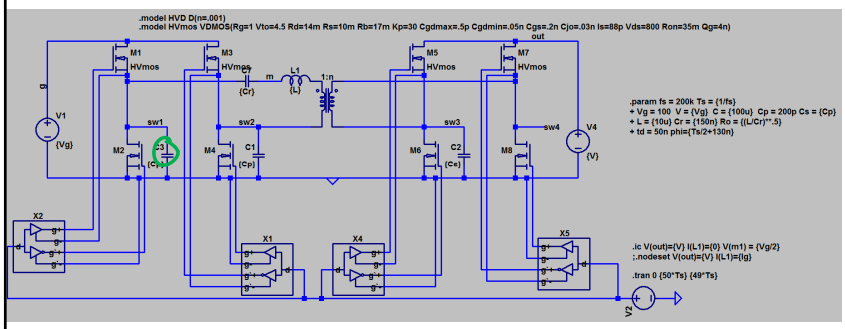

SRC Simulation

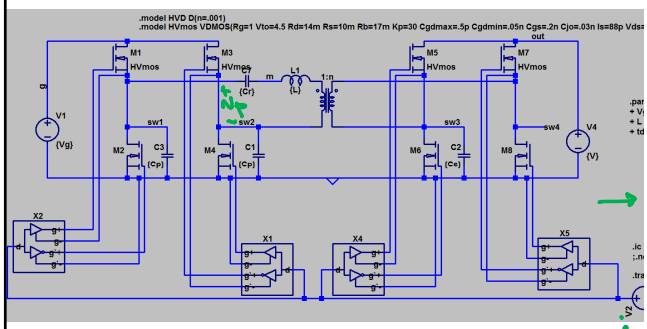

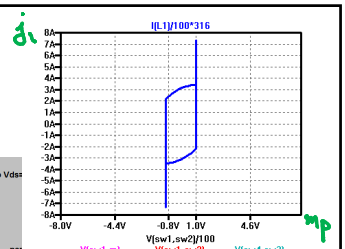

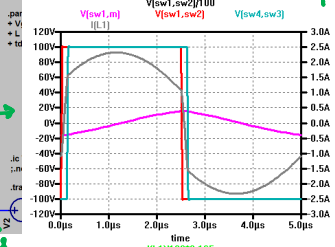

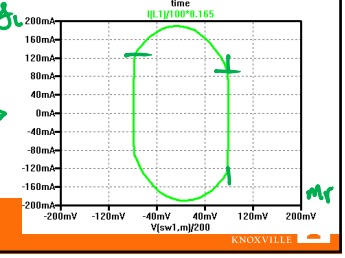

F = 1.05

SRC – Heavy Load

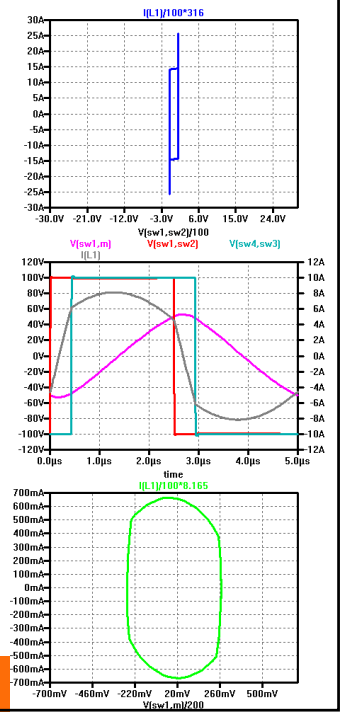

SRC – Light Load

Lost ZVS @ light power

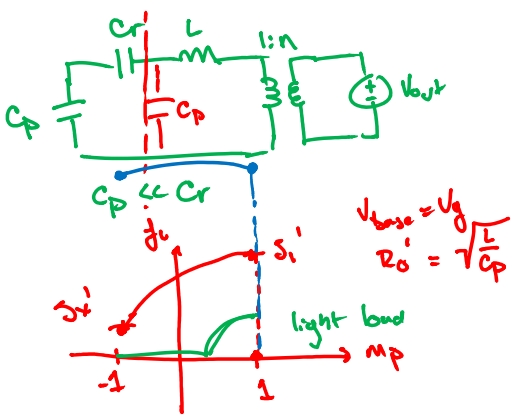

$V_{base} = V_g$

$R_0' = \sqrt{\frac{L}{C_p}}$

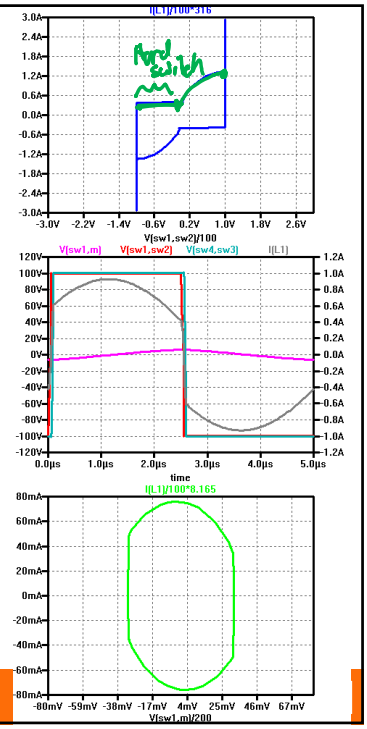

SRC Near Resonance

$f_s \approx f_o$

$f_s > f_o$

slightly

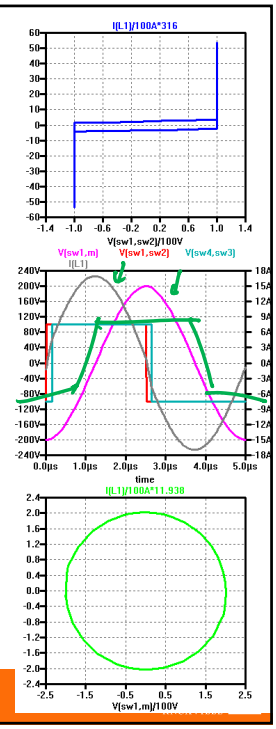

SRC – Low V_{out}

$V \neq nV_g$

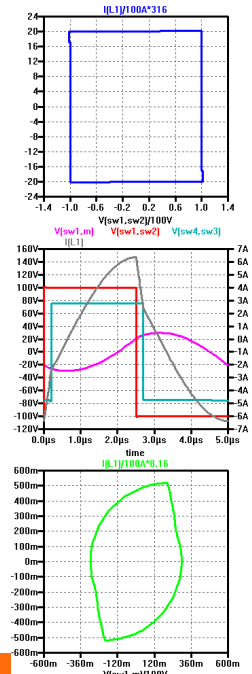

SRC – F>>1

F >> → fs >> fo

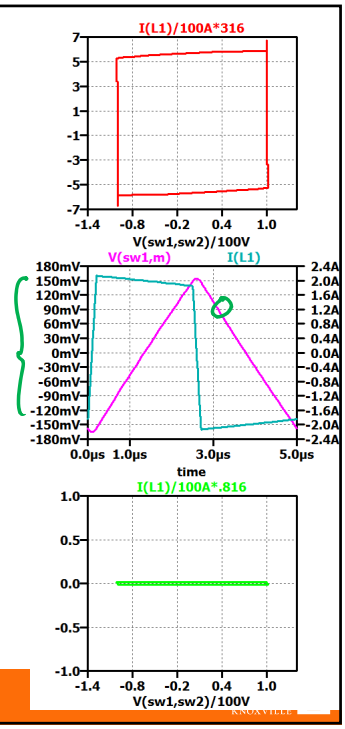

DAB vs SRC

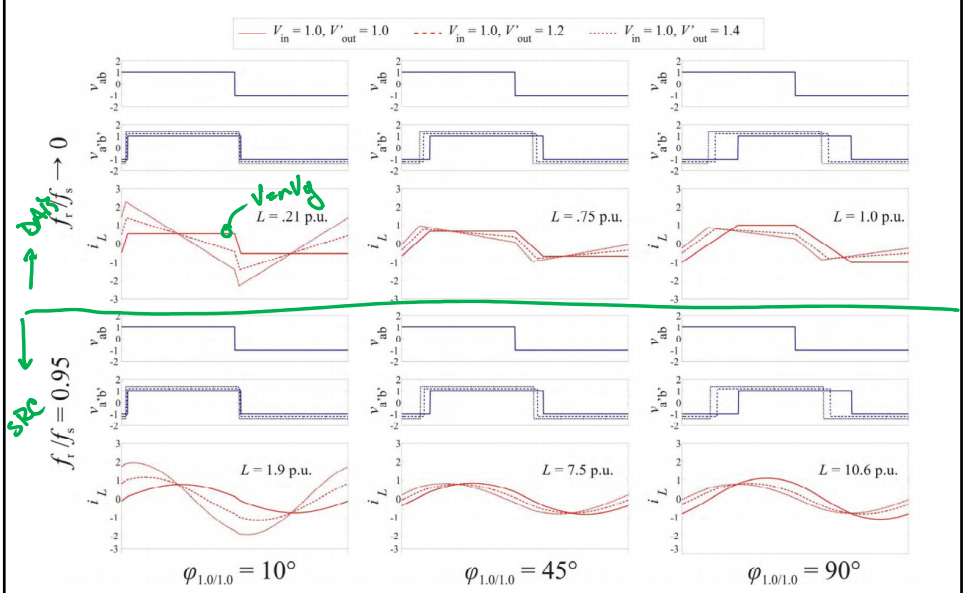

R. Lenke, F. Mura and R. W. De Doncker, "Comparison of non-resonant and super-resonant dual-active ZVS-operated high-power DC-DC converters,"

THE UNIVERSITY OF TENNESSEE KNOXVILLE

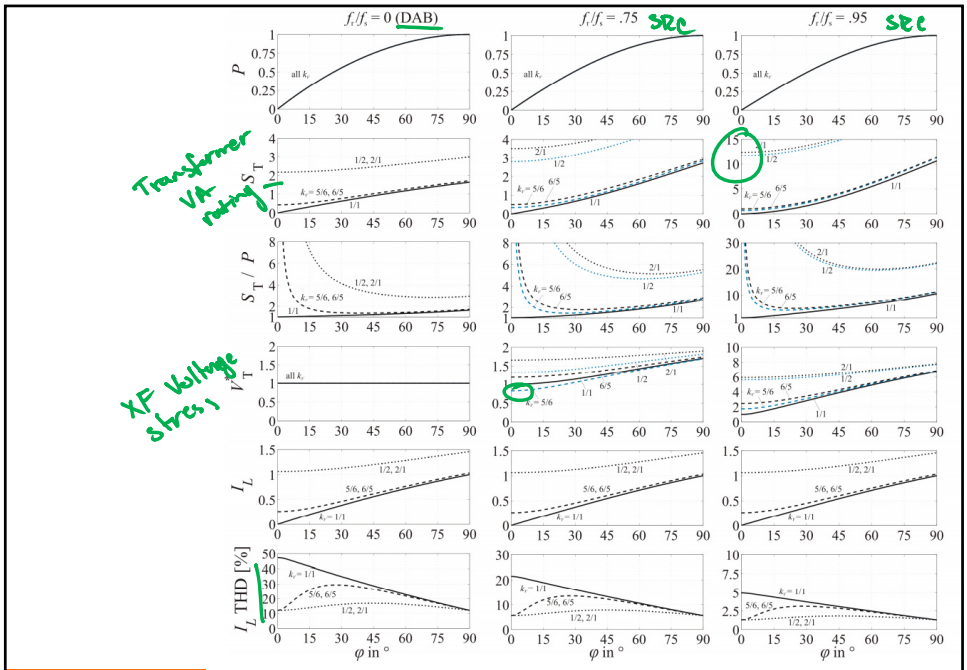

R. Lenke, F. Mura and R. W. De Doncker, "Comparison of non-resonant and super-resonant dual-active ZVS-operated high-power DC-DC converters,"

THE UNIVERSITY OF TENNESSEE KNOXVILLE

DAB vs SRC: Conclusions

DAB

- + Smaller resonant tank
- + Smaller RMS currents
- + Wider Soft-switching range

SRC

- + Can be designed with larger XF inductance
- + Lower AC winding losses
- + Reduced device turn-off losses

R. Lenke, F. Mura and R. W. De Doncker, "Comparison of non-resonant and super-resonant dual-active ZVS-operated high-power DC-DC converters,"

THE UNIVERSITY OF TENNESSEE KNOXVILLE

Linear Averaged Modeling of DAB

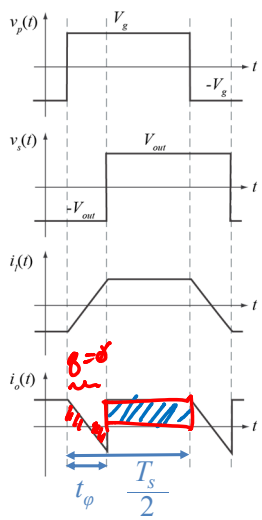

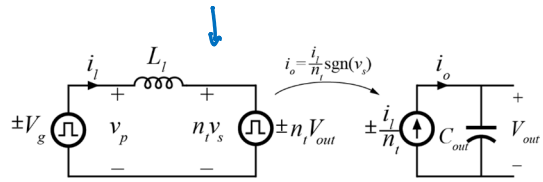

- Assuming squarewave outputs of both bridges, inductor current consists of linear segments
- If L_l has zero DC bias, average output current solved algebraically

$$\langle i_o \rangle \big|_{T_s} \approx \int_0^{T_s} \frac{i_o(t)dt}{T_s} = \frac{v_g(t)}{n_t L_l T_s}\left(T_s t_\varphi - 2t_\varphi{}^2\right)$$

Superposition of Output Current

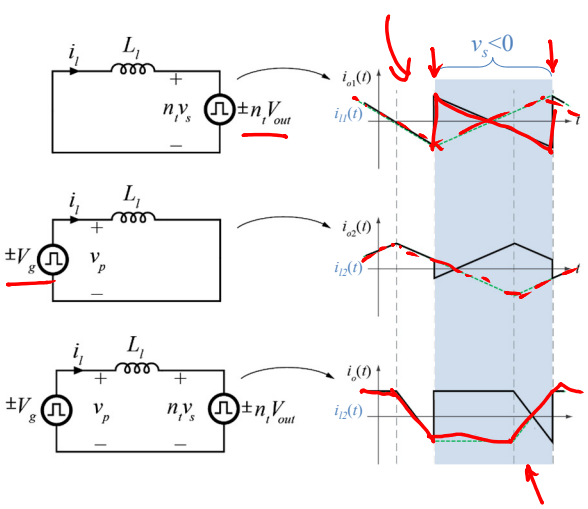

- Considering primary and secondary squarewaves independently
- Contribution of secondary to i_o is purely AC
- Contribution of primary to i_o contains DC component

Superposition of Output Current

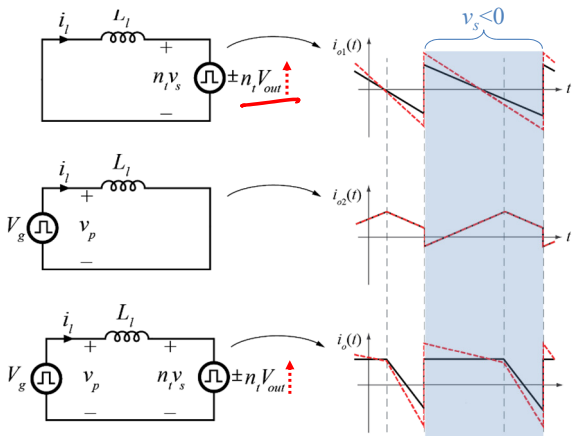

- Considering primary and secondary squarewaves independently
- Contribution of secondary to i_o is purely AC
- Contribution of primary to i_o contains DC component
- As V_{out} increases, only AC component from secondary is increased
- Average current unaffected