Simplification

SRC Control Trajectory

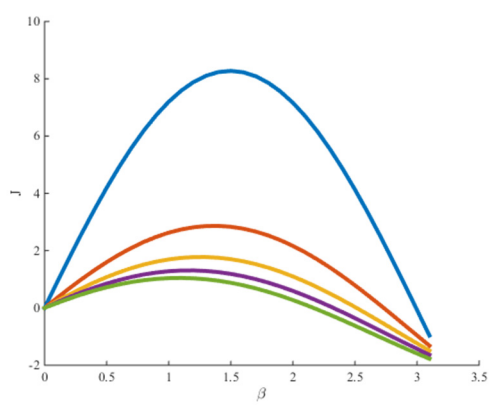

THE UNIVERSITY OF TENNESSEE KNOXVILLE

SRC Simulation

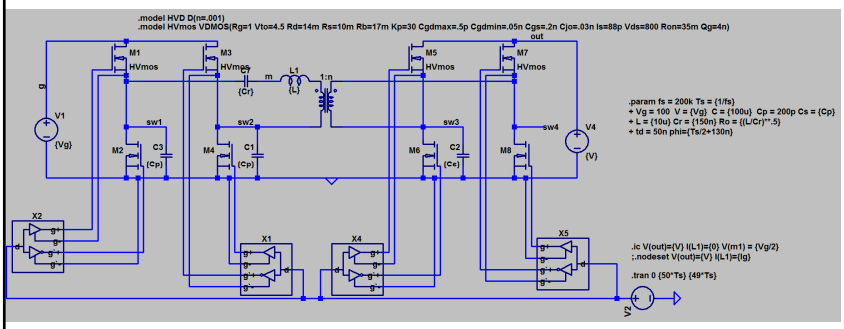

SRC Simulation

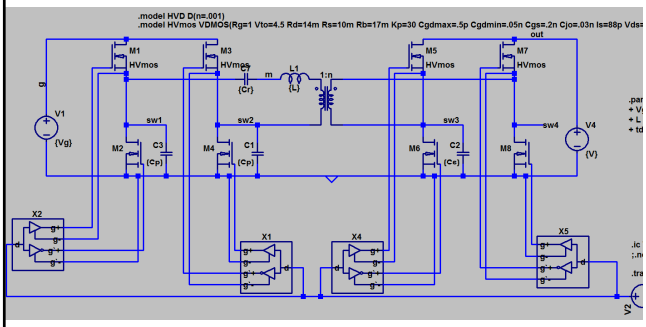

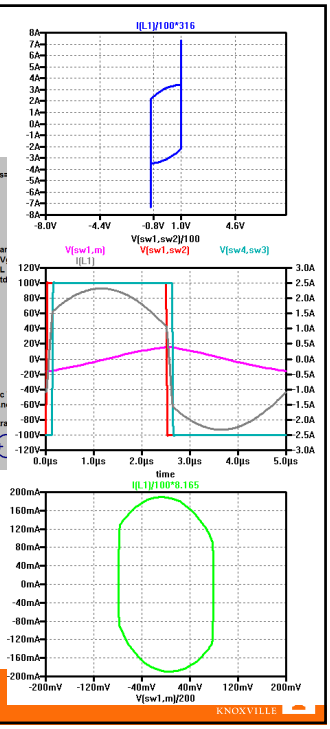

SRC – Heavy Load

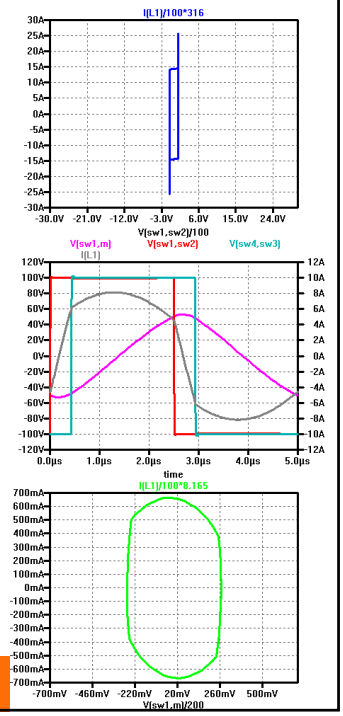

SRC – Light Load

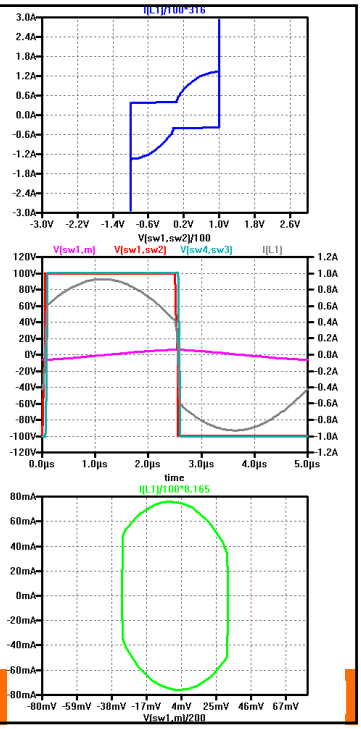

SRC Near Resonance

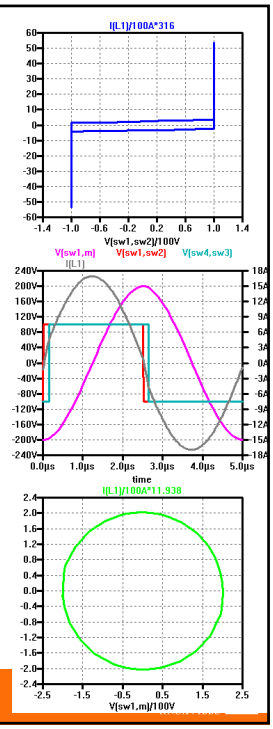

SRC – Low V_{out}

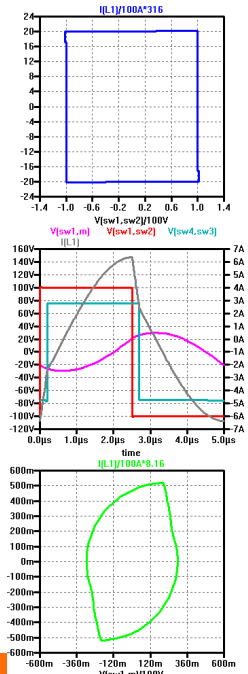

SRC – F>>1

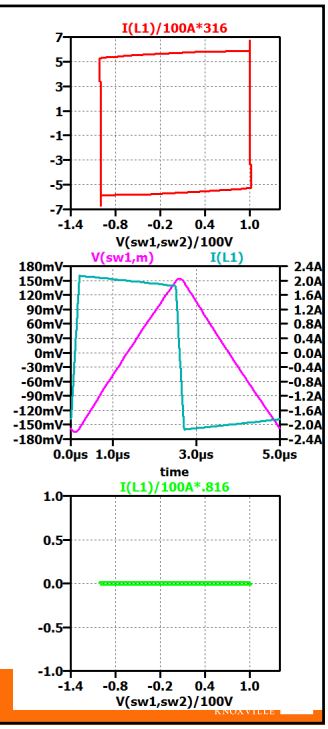

DAB vs SRC

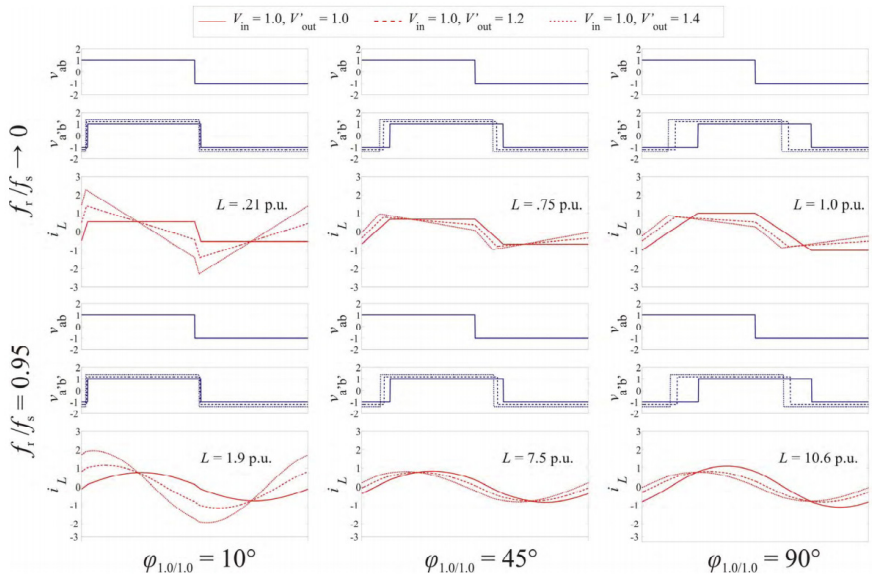

R. Lenke, F. Mura and R. W. De Doncker, "Comparison of non-resonant and super-resonant dual-active ZVS-operated high-power DC-DC converters,"

THE UNIVERSITY OF TENNESSEE KNOXVILLE

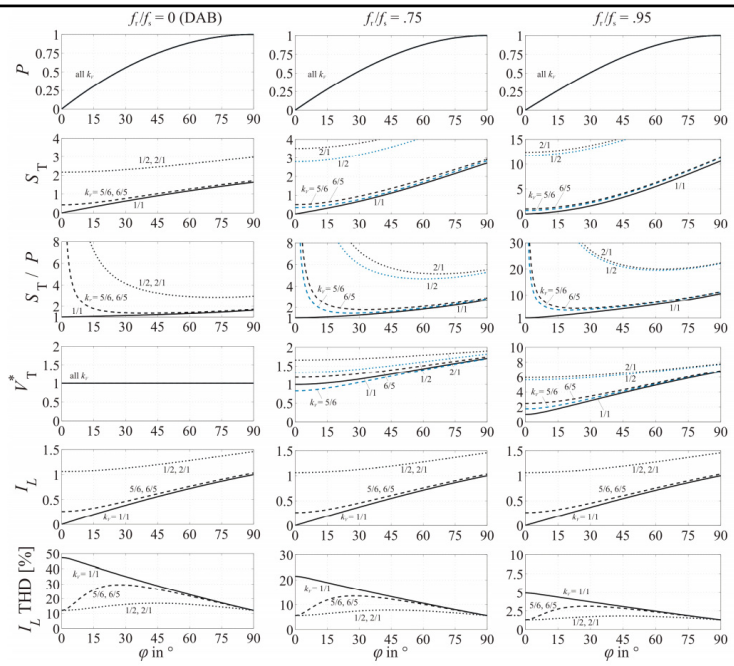

R. Lenke, F. Mura and R. W. De Doncker, "Comparison of non-resonant and super-resonant dual-active ZVS-operated high-power DC-DC converters,"

THE UNIVERSITY OF TENNESSEE KNOXVILLE

DAB vs SRC: Conclusions

DAB

- + Smaller resonant tank
- + Smaller RMS currents
- + Wider Soft-switching range

SRC

- + Can be designed with larger XF inductance
- + Lower AC winding losses
- + Reduced device turn-off losses

R. Lenke, F. Mura and R. W. De Doncker, "Comparison of non-resonant and super-resonant dual-active ZVS-operated high-power DC-DC converters,"

THE UNIVERSITY OF TENNESSEE KNOXVILLE

Linear Averaged Modeling of DAB

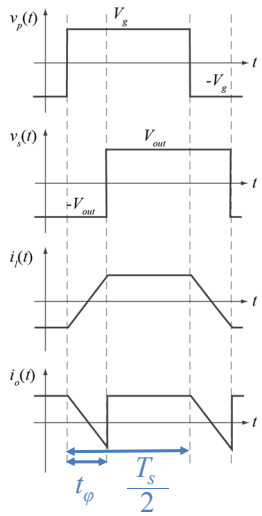

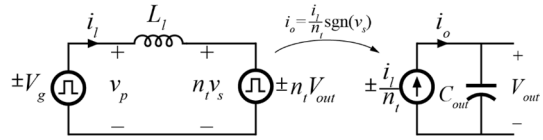

- Assuming squarewave outputs of both bridges, inductor current consists of linear segments
- If L_l has zero DC bias, average output current solved algebraically

$$\langle i_o \rangle \big|_{T_s} \approx \int_0^{T_s} \frac{i_o(t)dt}{T_s} = \frac{v_g(t)}{n_t L_l T_s}\left(T_s t_\varphi - 2t_\varphi{}^2\right)$$

Superposition of Output Current

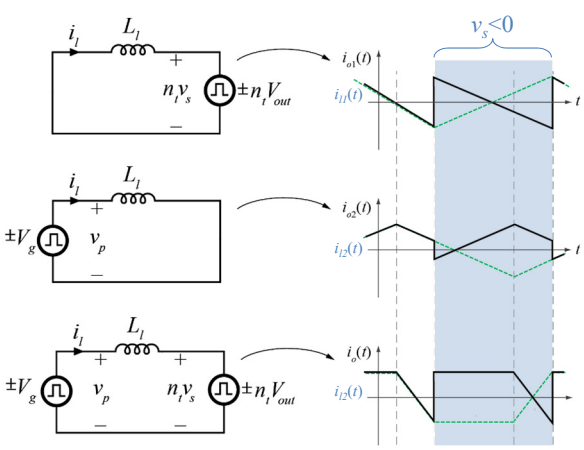

- Considering primary and secondary squarewaves independently
- Contribution of secondary to i_o is purely AC
- Contribution of primary to i_o contains DC component

Superposition of Output Current

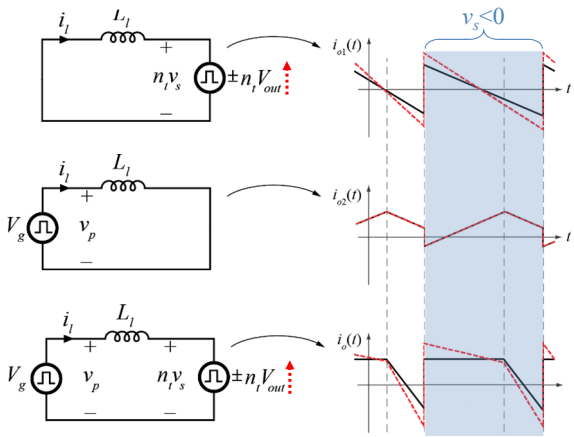

- Considering primary and secondary squarewaves independently
- Contribution of secondary to i_o is purely AC
- Contribution of primary to i_o contains DC component
- As V_{out} increases, only AC component from secondary is increased
- Average current unaffected