Nonlinearities in Power Electronics

1. Circuit reconfiguration

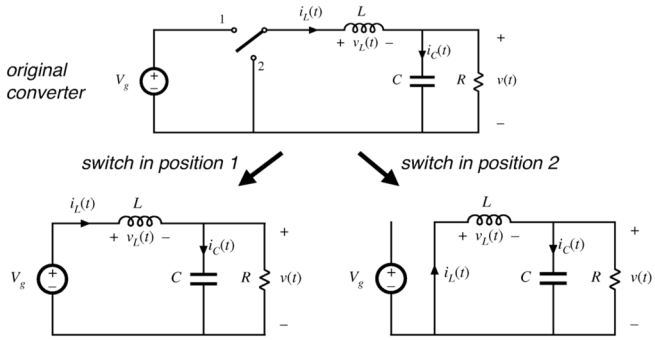

Nonlinearities in Power Electronics

1. Circuit reconfiguration
2. Component Value Nonlinearities

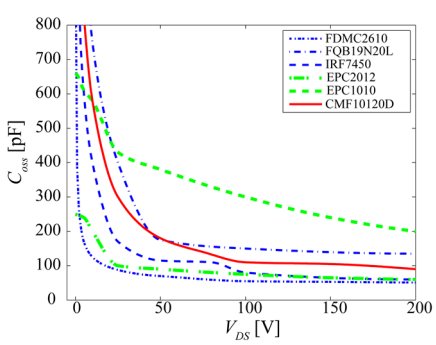

Nonlinearities in Power Electronics

1. Circuit reconfiguration
2. Component Value Nonlinearities
3. Switching Event Nonlinearities

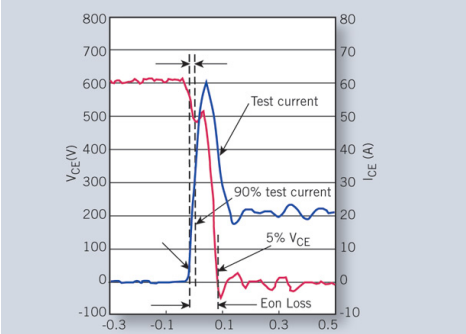

Fig. 3. Turn-on transition of IRG7PH35UDPBF at V_{ce} = 600Vdc, I_{ce} = 20A, V_{ge} = 15V and T_j = 150°C.

Review of State Space Modeling

Example: State Space Model of Buck

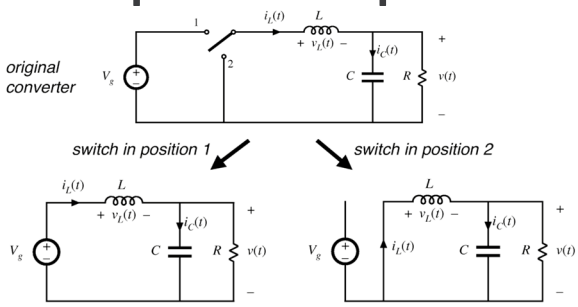

Buck State Space Averaging

Small Signal Model

Effect of Changing Duty Cycle

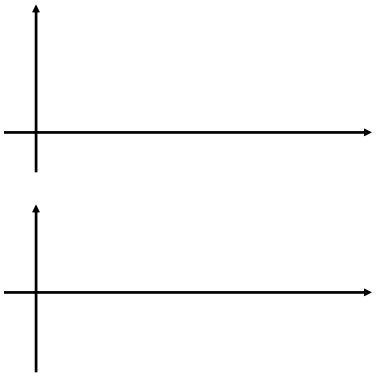

Another View: PWM Modulator

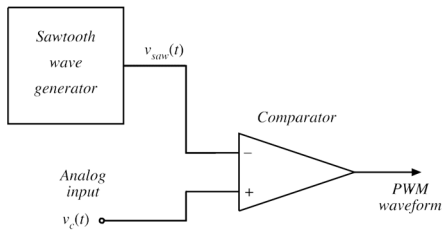

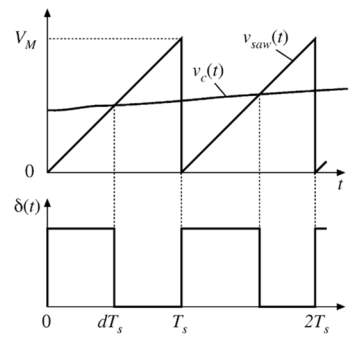

$$d = \frac{v_c}{V_M}$$

Basic small-signal PWM model: gain $1/V_M$

$$\hat{v}_c \rightarrow \boxed{1/V_M} \rightarrow \hat{d}$$

Average Modeling

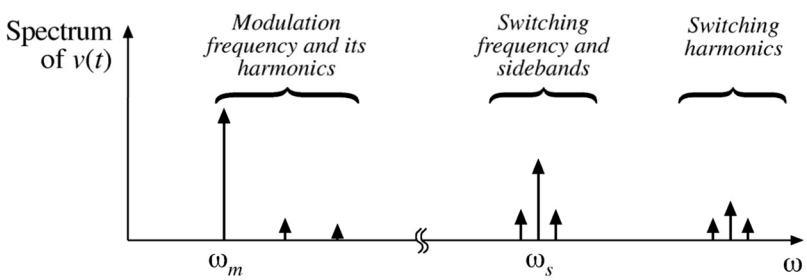

$$\langle x(t) \rangle_{T_s} = \frac{1}{T_s} \int_{t-T_s/2}^{t+T_s/2} x(\tau) d\tau$$

Averaging: Frequency Domain View

$$\langle x(t)\rangle_{T_s} = \frac{1}{T_s}\int_{t-T_s/2}^{t+T_s/2} x(\tau)d\tau$$

$$G_{av}(j\omega) = \frac{e^{j\omega T_s/2} - e^{-j\omega T_s/2}}{j\omega T_s} = \frac{\sin(\omega T_s/2)}{\omega T_s/2}$$

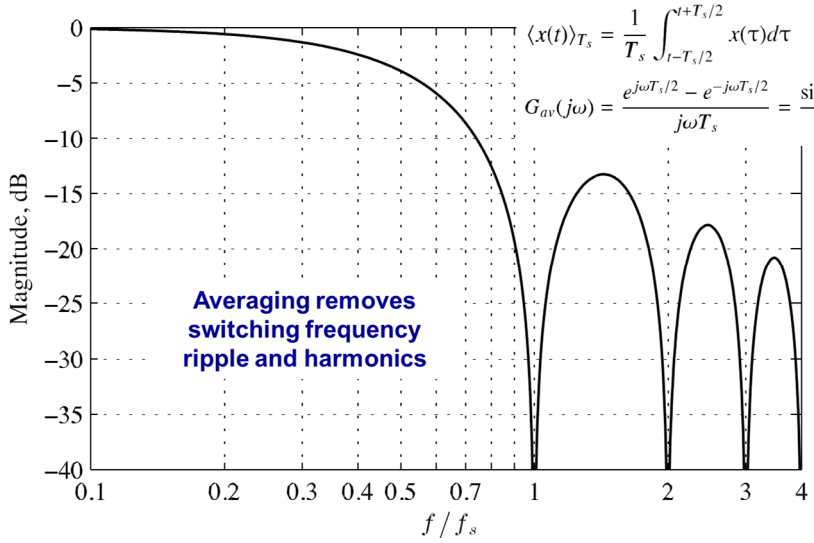

D. Maksimovic, "Analysis, Modeling and Design of Digitally Controlled Switched-Mode Power Converters", IEEE COMPEL 2013

THE UNIVERSITY OF TENNESSEE KNOXVILLE

Modeling in Discrete Time

A. R. Brown and R. D. Middlebrook, "Sampled-Data Modeling of Switching Regulators", 1981

THE UNIVERSITY OF TENNESSEE KNOXVILLE