Time-Domain Analysis of Switching Transitions

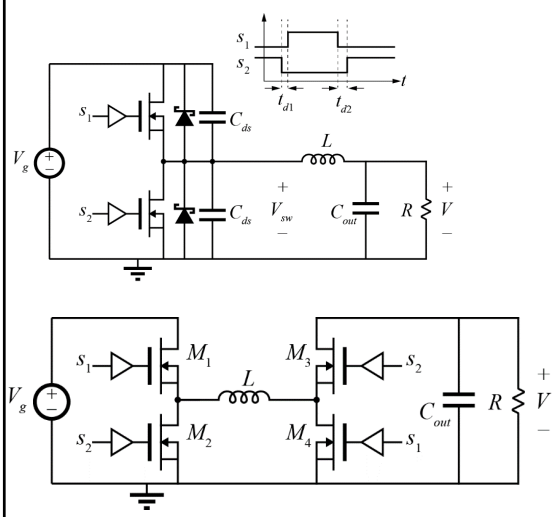

Resonant Circuit Solution

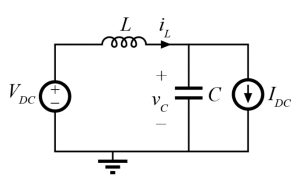

Normalization and Notation

$$v_c(t) = V_{DC} + (V_0 - V_{DC})\cos\left(\frac{t}{\sqrt{LC}}\right) + (I_0 - I_{DC})\sqrt{\frac{L}{C}}\sin\left(\frac{t}{\sqrt{LC}}\right)$$

$$i_L(t) = I_{DC} + (I_0 - I_{DC})\cos\left(\frac{t}{\sqrt{LC}}\right) + (V_{DC} - V_0)\sqrt{\frac{C}{L}}\sin\left(\frac{t}{\sqrt{LC}}\right)$$

THE UNIVERSITY OF TENNESSEE KNOXVILLE

State Plane Analysis

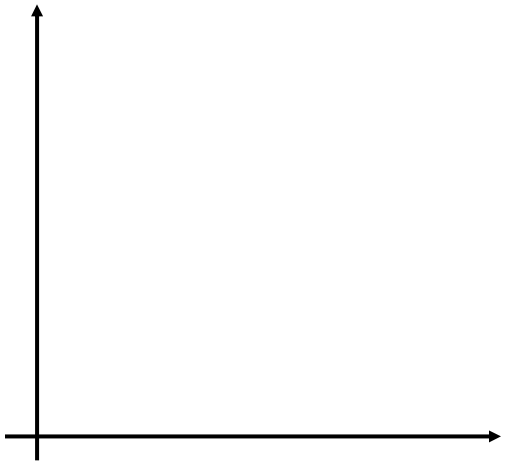

[1] R. Oruganti and F. C. Lee, "Resonant Power Processors, Part I – State Plane Analysis", Industry Applications, IEEE Tran. on, vol. 21, no. 6, nov 1985.
[2] D. P. Atherton, Nonlinear Control Engineering. London: Van Nostrand Reinhold, 1982, Ch. 2.