ECE 325 – Electric Energy System Components
4- Transformers

Instructor:

Kai Sun

Fall 2015

Content

- Ideal Transformer (Ch. 9)
- Practical Transformers (Ch. 10)
- Special Transformers (Ch. 11)
- Three-Phase Transformers (Ch. 12)

Power Transformer

- Ideal transformers
  - Winding resistance is negligible
  - No leakage flux
  - Permeability of the core is infinite (zero magnetizing current I_p is needed to produce flux)
  - No core loss

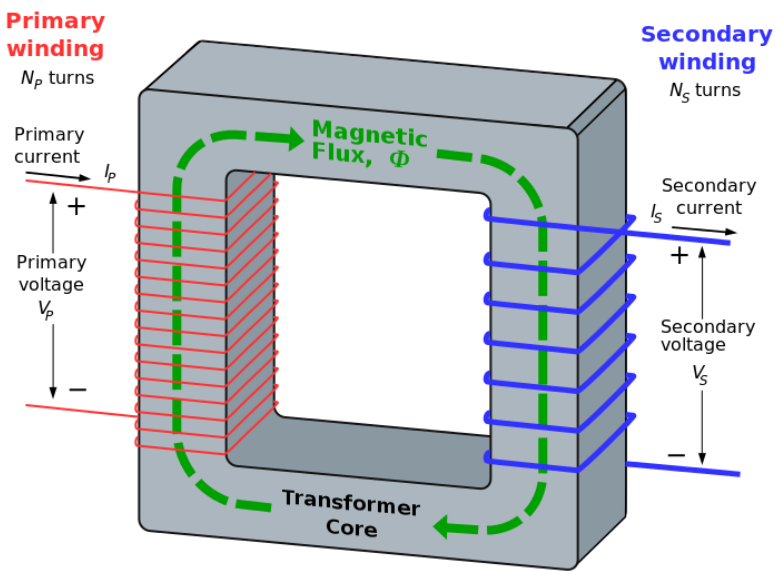

- Real transformers:
  - Windings have resistance
  - Windings do not link the same flux (having leakage flux)
  - Permeability of the core is finite
  - Have core losses (hysteresis losses and eddy current losses due to time varying flux)

Ideal Transformer

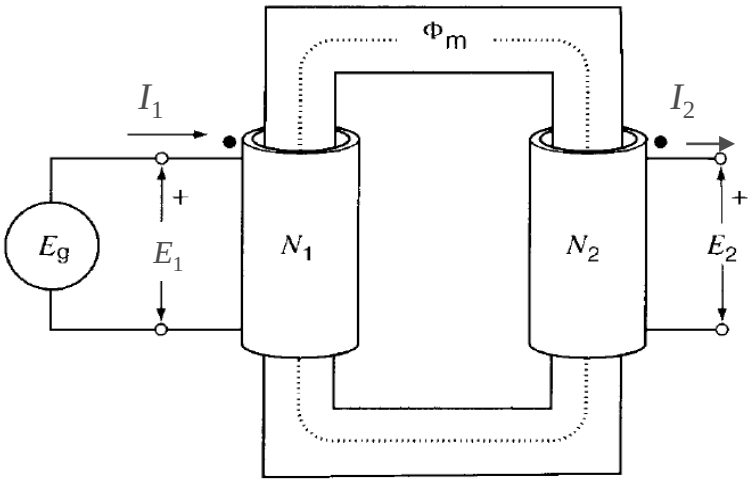

- Primary winding (assuming sinusoidal flux):

  Because there is no flux leakage,

  $\phi_1=\phi_2=\phi_m$ (mutual flux)

$$\phi_m = \Phi_{\max} \cos \omega t$$

$$e_g = e_1 = N_1 \frac{d\phi}{dt} = -\omega N_1 \Phi_{\max} \sin \omega t$$

$$= E_{1\max} \cos(\omega t + 90°)$$

$$E_{1\max} = 2\pi f N_1 \Phi_{\max} = 6.28 f N_1 \Phi_{\max} = \sqrt{2} \times 4.44 f N_1 \Phi_{\max}$$

$$E_g = E_1 = 4.44 f N_1 \Phi_{\max} \angle 90^\circ$$

- Secondary winding:

  Because there is no flux leakage

$$e_2 = N_2 \frac{d\phi_m}{dt} = E_{2\max} \cos(\omega t + 90°)$$

$$E_{2\max} = 2\pi f N_2 \Phi_{\max} = \sqrt{2} \times 4.44 f N_2 \Phi_{\max}$$

$$E_2 = 4.44 f N_2 \Phi_{\max} \angle 90^\circ$$

- Voltage/turns ratio $a=E_1/E_2=N_1/N_2$

No-load and Load Conditions

- Under no-load conditions, because of infinitely permeable core, no magnetizing current is required to produce flux ϕ_m. There are

$$I_1 = I_2 = 0$$

- Under load conditions ($I_1 \neq 0$, $I_2 \neq 0$,) because of the infinitely permeable core, there is an exact mmf balance

$$F_1 = I_1 N_1 = I_2 N_2 = F_2$$

$$\boxed{a = \frac{E_1}{E_2} = \frac{I_2}{I_1} = \frac{N_1}{N_2}}$$

- Phasor diagram:
  - Assume power factor cosθ

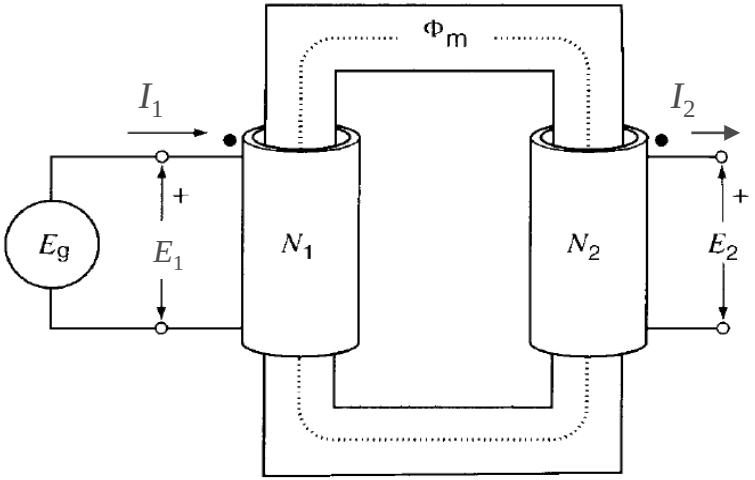

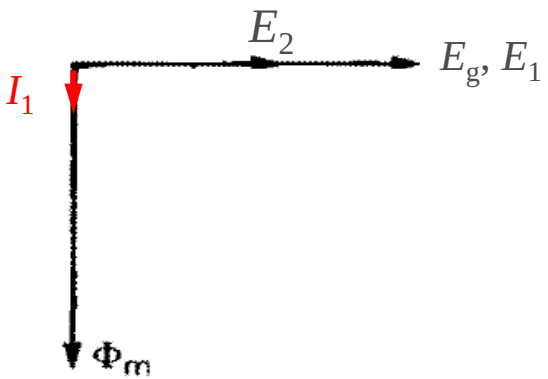

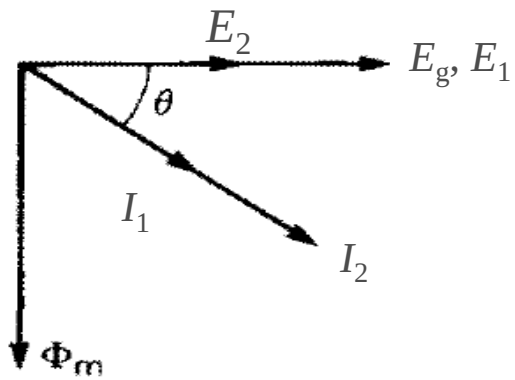

Circuit Symbol for an Ideal Transformer

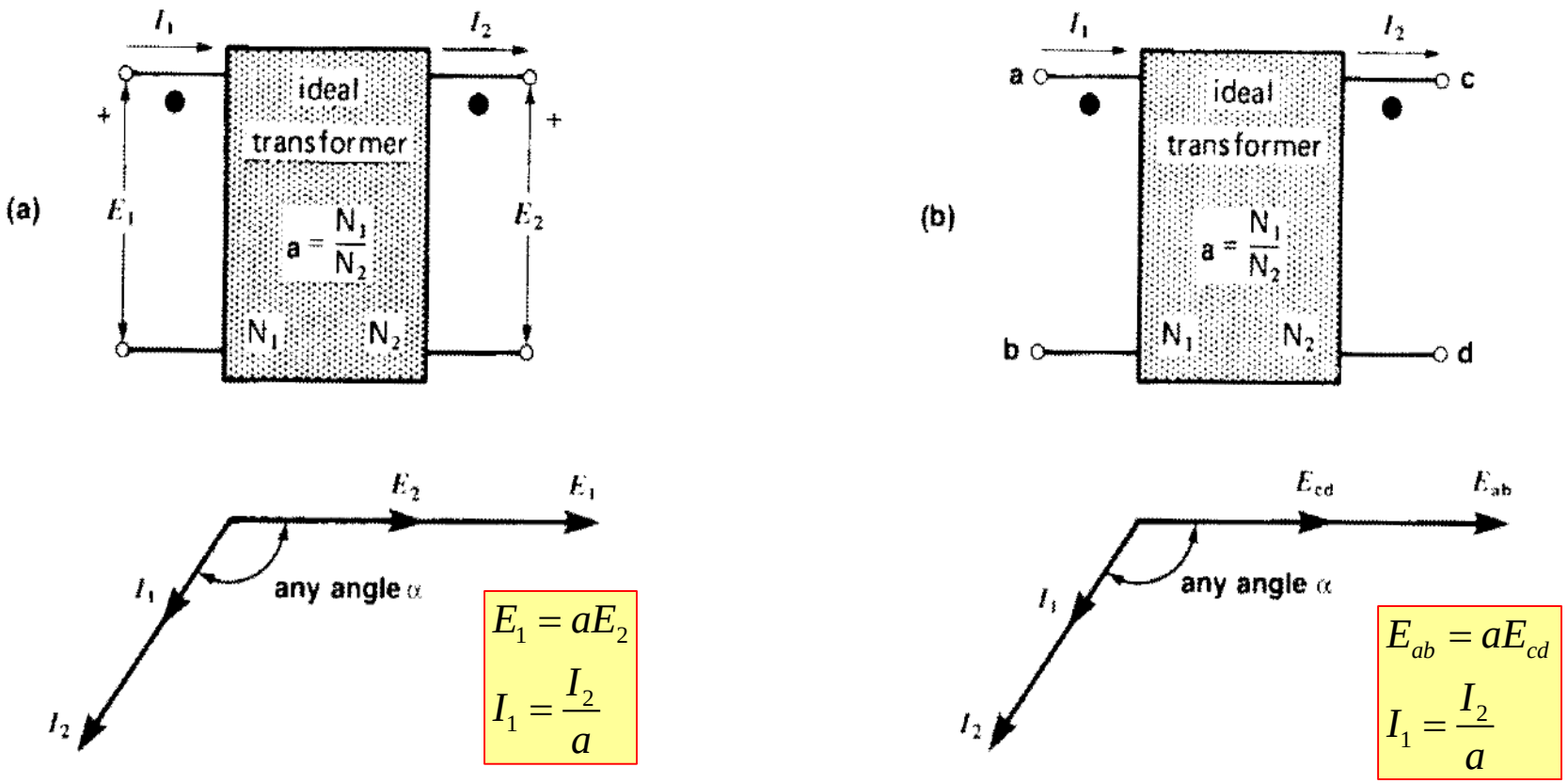

Figure 9.11

a. Symbol for an ideal transformer and phasor diagram using sign notation.

b. Symbol for an ideal transformer and phasor diagram using double-subscript notation.

Impedance Ratio

$$Z = \frac{E_2}{I_2}$$

$$\boxed{\begin{aligned} E_1 &= aE_2 \\ I_1 &= I_2 / a \end{aligned}}$$

$$Z_X = \frac{E_1}{I_1} = \frac{aE_2}{I_2 / a} = a^2 Z$$

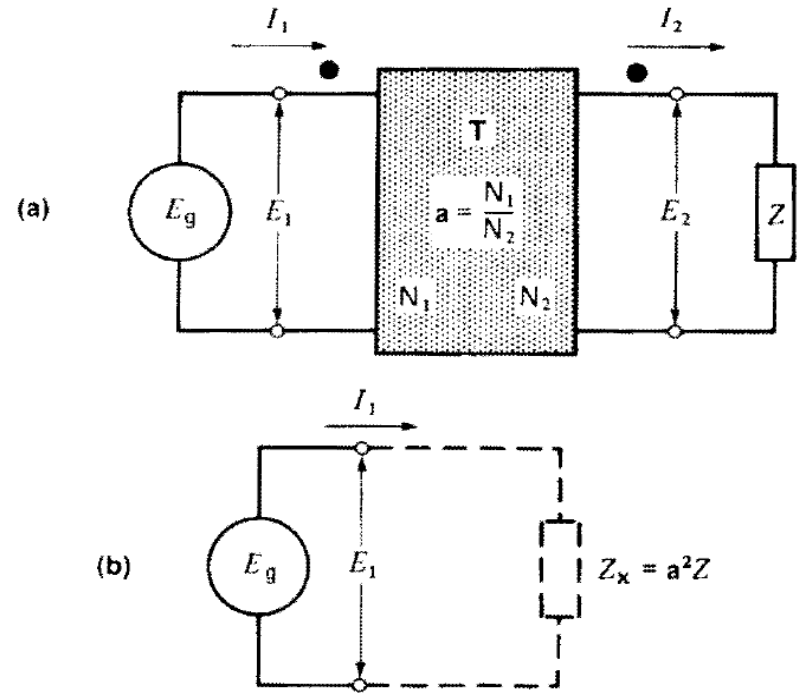

Figure 9.12
a. Impedance transformation using a transformer.
b. The impedance seen by the source differs from Z.

- **Impedance transformation**
  - The impedance seen by the source (primary side) is a^2 times the real impedance (secondary side)
  - Thus, an ideal transformer has the amazing ability to increase or decrease the value of an impedance

Shifting Impedances (S→P)

$Z_p \leftarrow a^2 \leftarrow Z_s$

$E_p \leftarrow a \leftarrow E_s$

$I_p \leftarrow 1/a \leftarrow I_s$

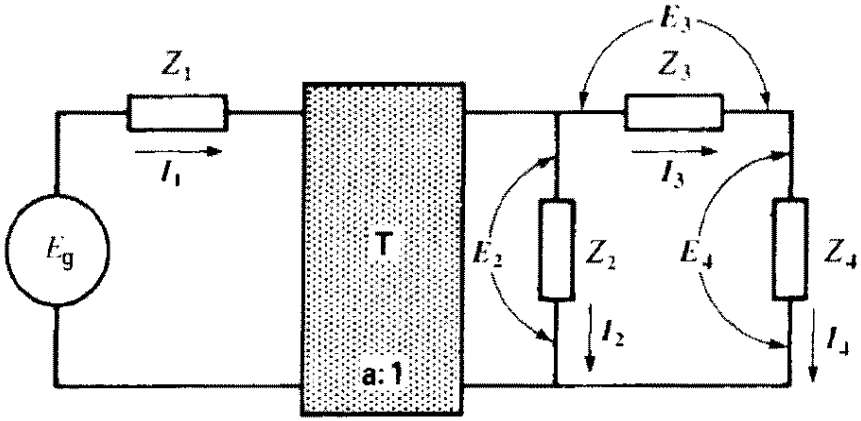

1

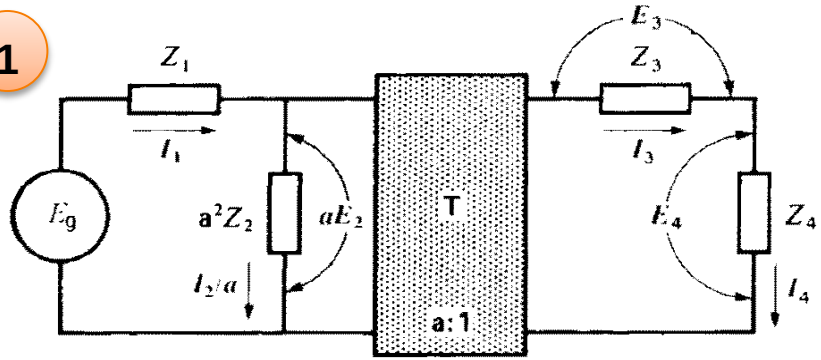

2

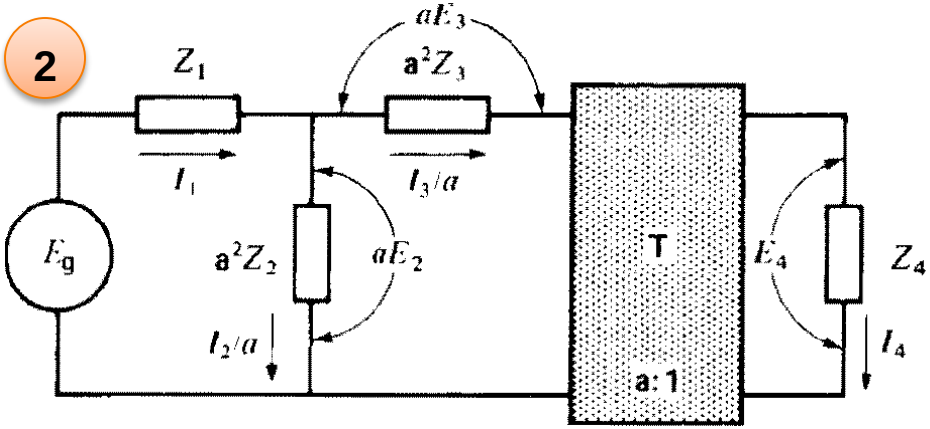

3

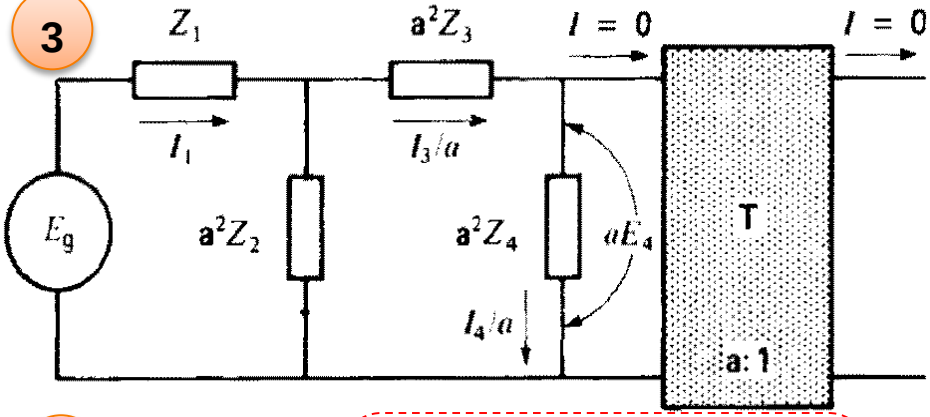

4

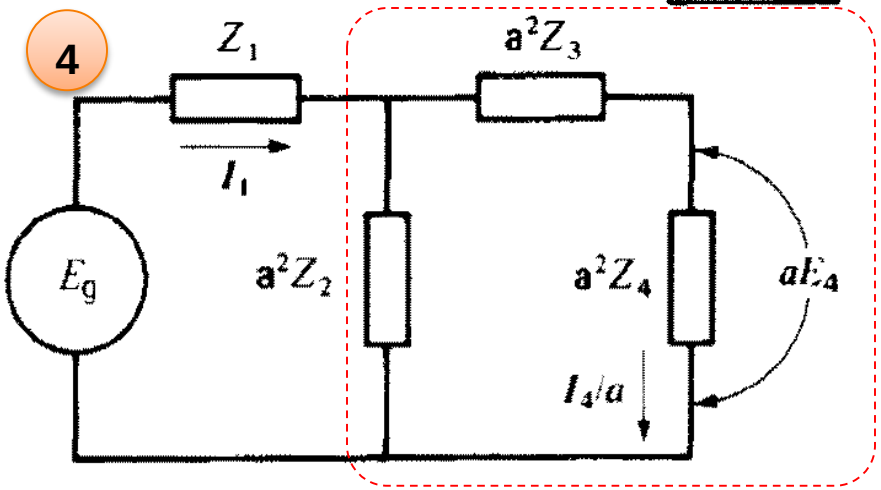

Shifting Impedances (P→S)

$Z_p \rightarrow \boxed{1/a^2} \rightarrow Z_s$

$E_p \rightarrow \boxed{1/a} \rightarrow E_s$

$I_p \rightarrow \boxed{a} \rightarrow I_s$

1

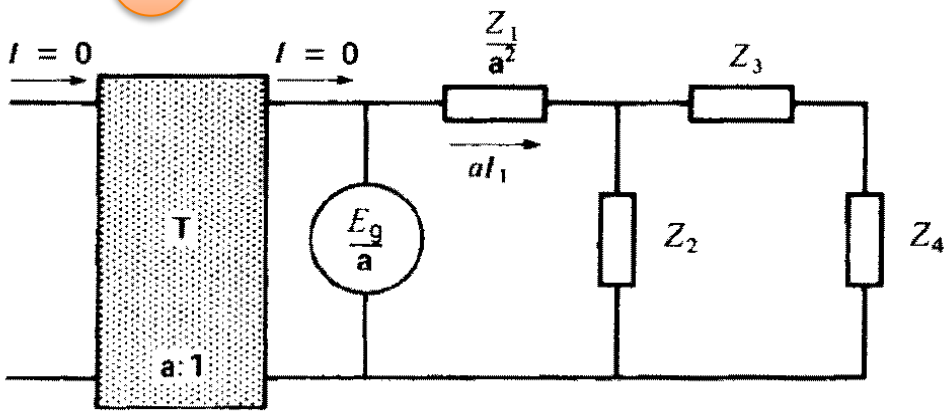

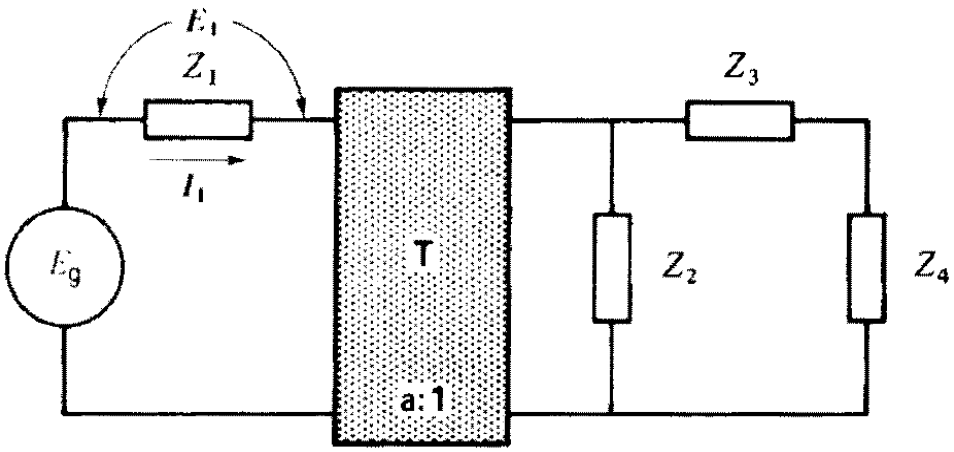

2

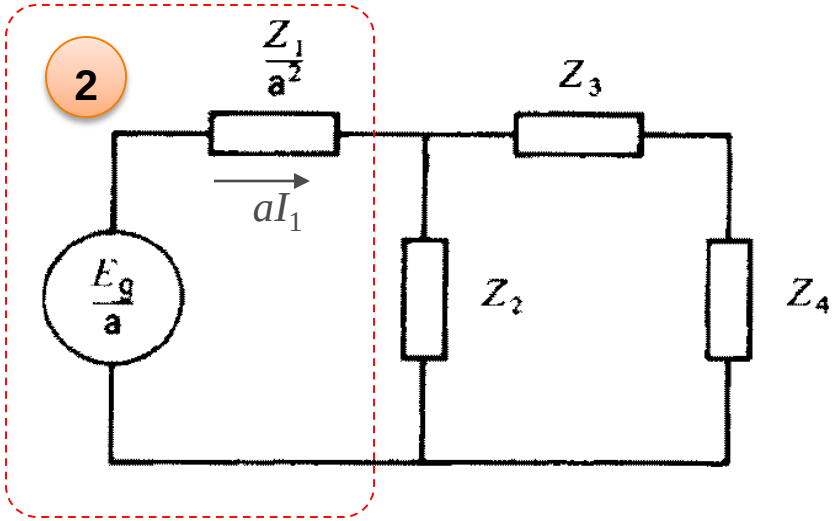

Examples 9-4&9-5

Considering an imperfect core

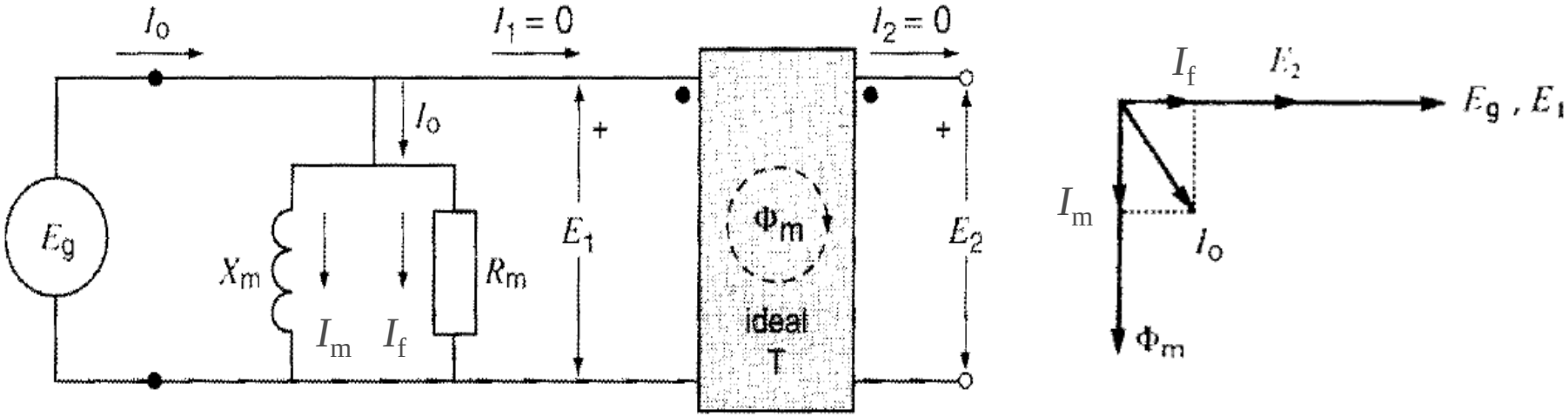

- P_m+jQ_m and I_o are the complex power and current outputs of source E_g under no-loading conditions. P_m is the iron loss
- R_m is a resistance causing the iron loss and resulting heat

$$R_m = E_1^2/P_m \qquad I_f = E_1/R_m$$

- X_m is the magnetizing reactance that measures permeability of the core. A smaller X_m means lower permeability and needs a higher magnetizing current I_m (i.e. bigger reactive power Q_m) to set up mutual flux Φ_m

$$X_m = E_1^2/Q_m \qquad I_m = E_1/jX_m$$

Considering loose coupling and resistances of windings

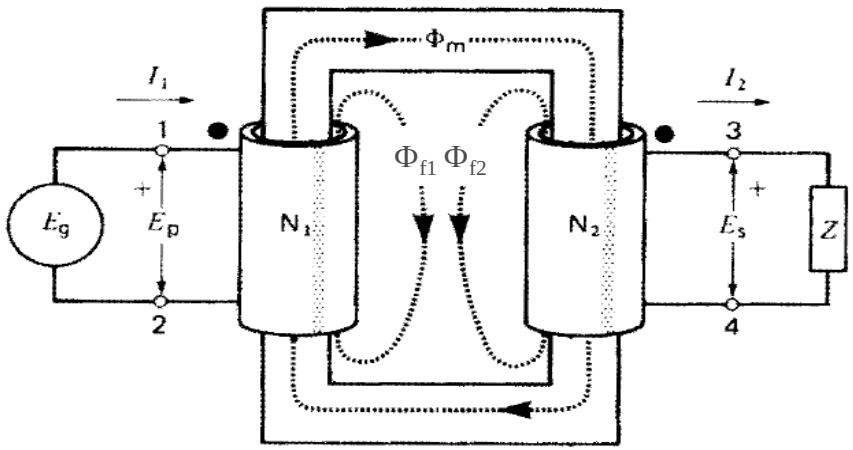

Figure 10.5
A transformer possesses two leakage fluxes and a mutual flux.

$$E_1 = 4.44 f N_1 \Phi_m \qquad E_2 = 4.44 f N_2 \Phi_m$$

$$E_{f1} = 4.44 f N_1 \Phi_{f1} \qquad E_{f2} = 4.44 f N_2 \Phi_{f2}$$

$$E_1 + E_{f1} = E_p = E_g \qquad E_2 + E_{f2} = E_s$$

- Define winding leakage reactances

  $X_{f1} = E_{f1}/I_1 \qquad X_{f2} = E_{f2}/I_2$

- Add winding resistances R_1 and R_2 in series with X_{f1} and X_{f2}, respectively

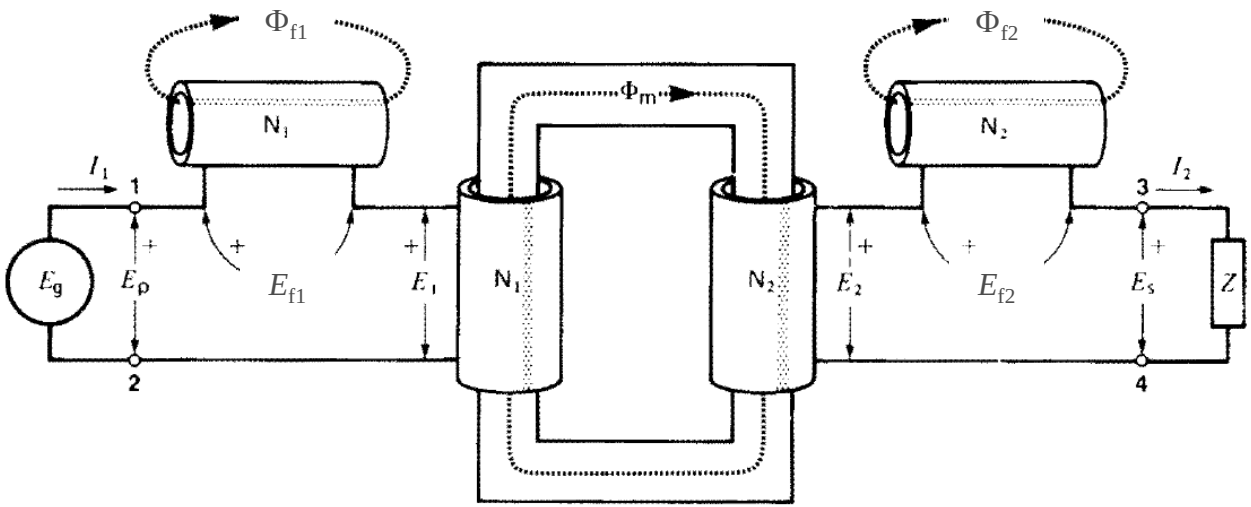

Figure 10.6
Separating the various induced voltages due to the mutual flux and the leakage fluxes.

Equivalent Circuit of a Practical Transformer

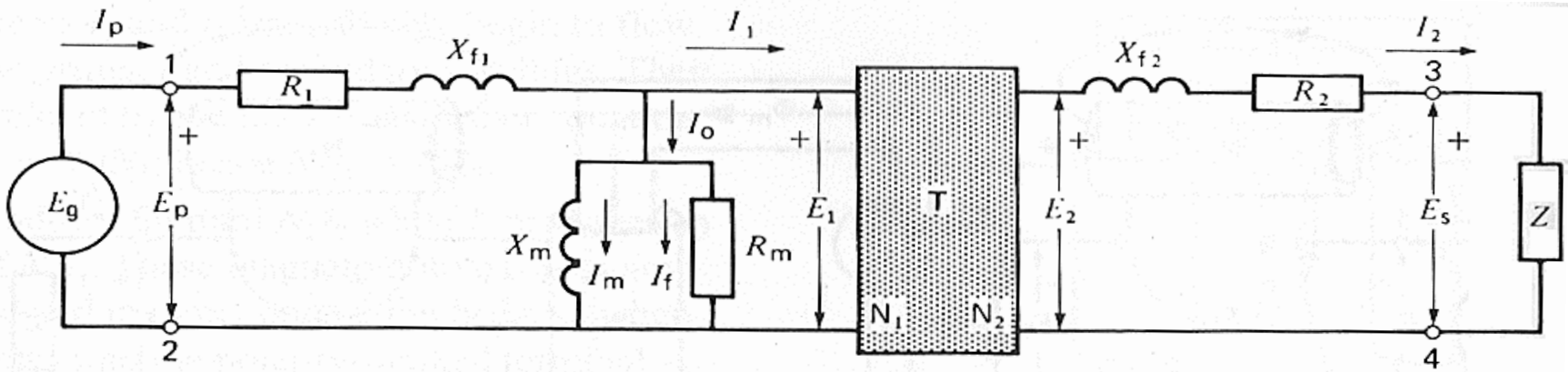

Figure 10.8
Complete equivalent circuit of a practical transformer. The shaded box T is an ideal transformer.

TABLE 10A ACTUAL TRANSFORMER VALUES

S_n	kVA	1	10	100	1000	400000
E_{np}	V	2400	2400	12470	69000	13800
E_{ns}	V	460	347	600	6900	424000
I_{np}	A	0.417	4.17	8.02	14.5	29000
I_{ns}	A	2.17	28.8	167	145	943
R_1	Ω	58.0	5.16	11.6	27.2	0.0003
R_2	Ω	1.9	0.095	0.024	0.25	0.354
X_{f1}	Ω	32	4.3	39	151	0.028
X_{f2}	Ω	1.16	0.09	0.09	1.5	27
X_m	Ω	200000	29000	150000	505000	460
R_m	Ω	400000	51000	220000	432000	317
I_o	A	0.0134	0.0952	0.101	0.210	52.9

- No-load conditions
  - $I_1=I_2=0$
  - Ignore R_1, X_{f1}, R_2 and X_{f2}
  - $E_p \approx E_1 = aE_2 = aE_s$
- 10%-100% load conditions
  - $I_p >> I_o$,
  - Ignore I_o

Simplified Equivalent Circuits

- No-load conditions
  - Ignoring winding leakage fluxes and losses

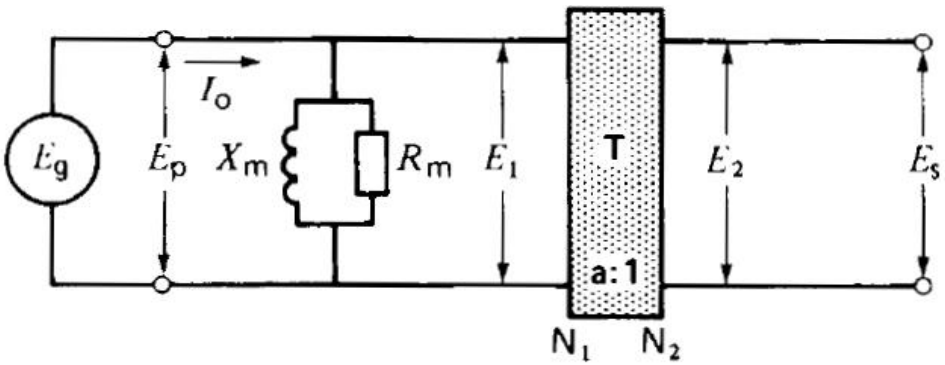

Figure 10.21
Simplified circuit at no-load.

- 10%-100% load conditions
  - Ignoring core reluctance and losses

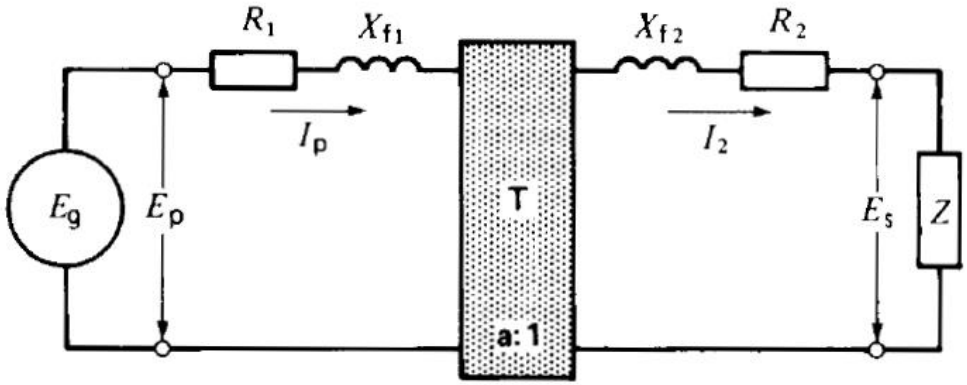

Figure 10.22
Simplified equivalent circuit of a transformer at full-load.

Equivalent Circuits Referred to One Side

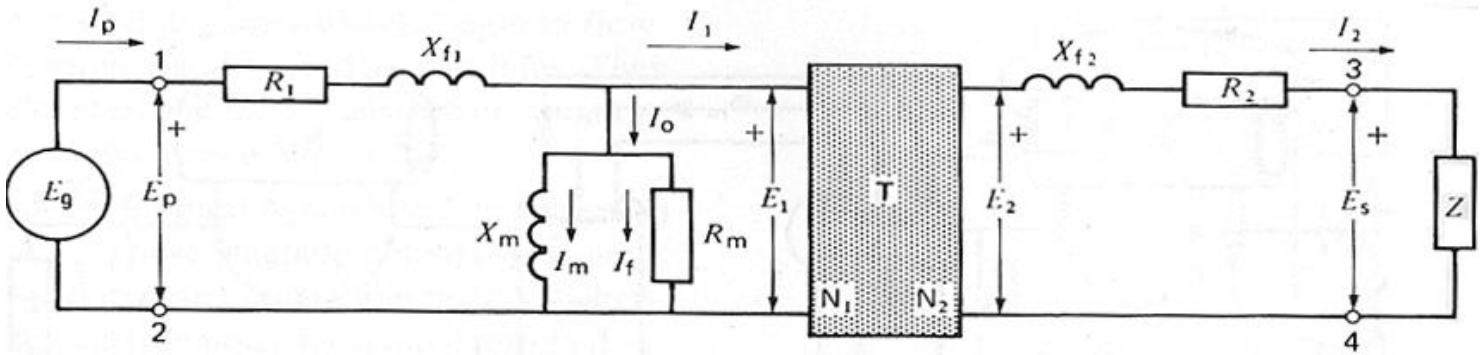

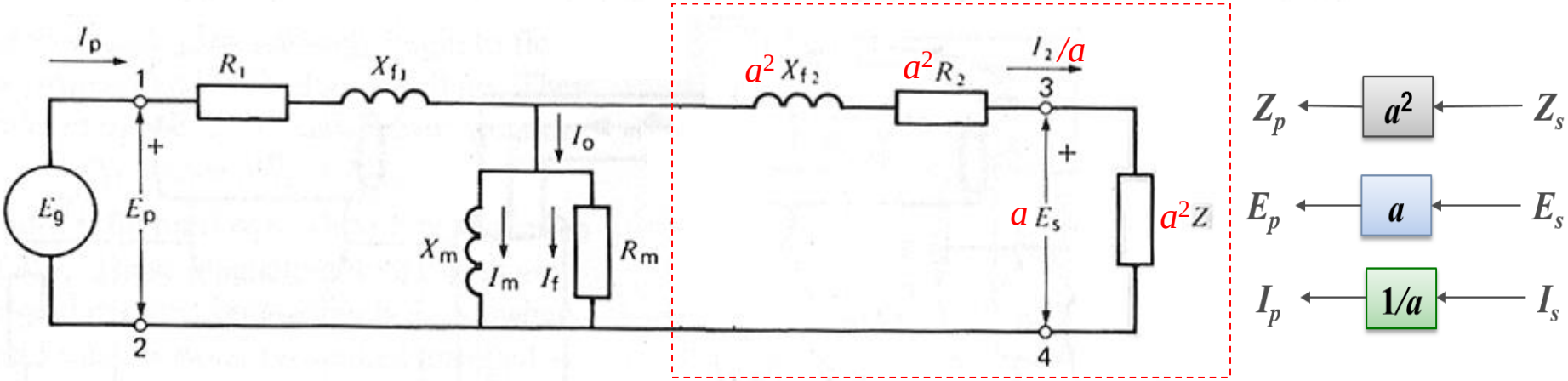

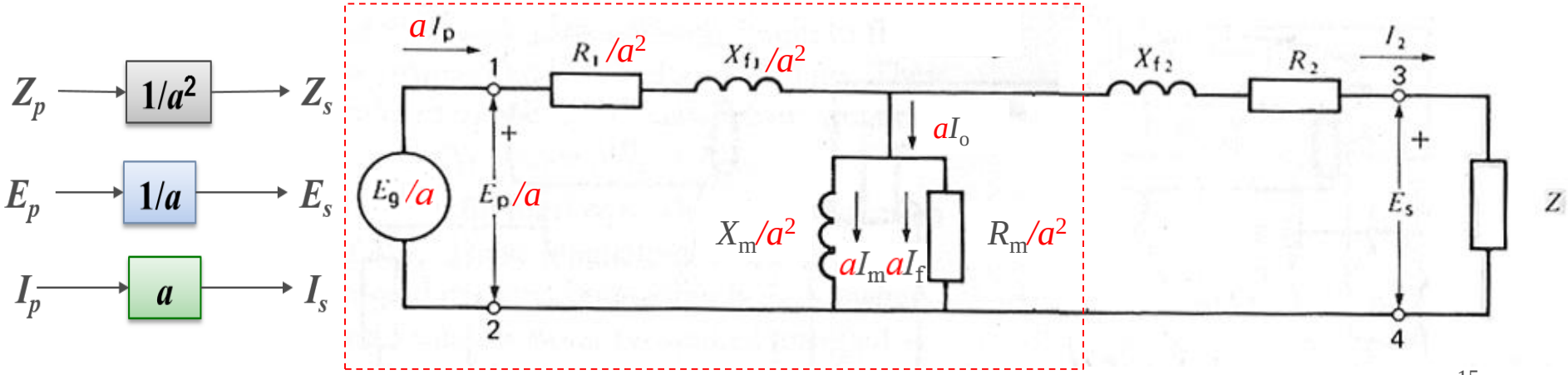

Simplified Equivalent Circuits Referred to One Side

- Under load conditions

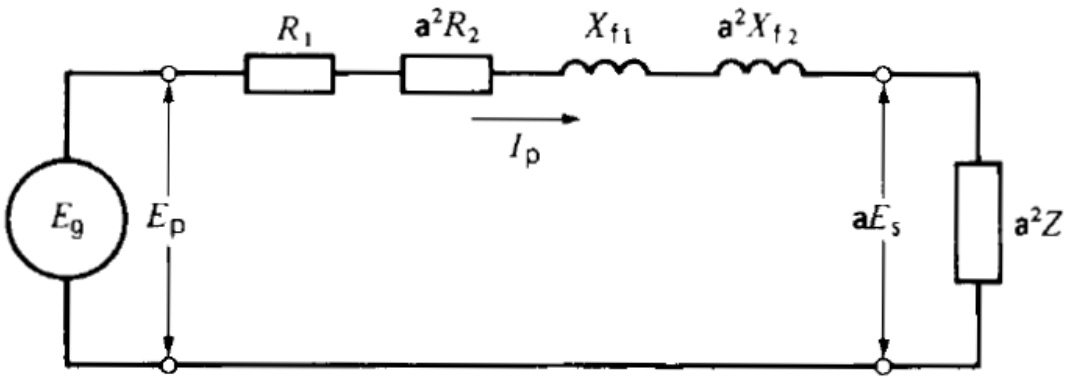

Figure 10.23
Equivalent circuit with impedances shifted to the primary side.

$$a = \frac{N_1}{N_2}$$

$$Z_p = R_p + j X_p$$
$$= R_1 + a^2 R_2 + j(X_{f1} + a^2 X_{f2})$$

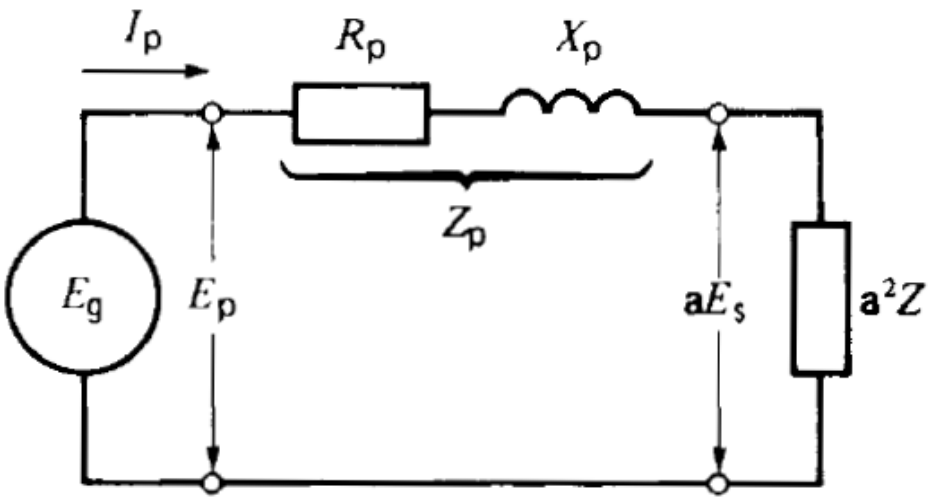

Voltage Regulation

- With the primary voltage held constant at its rated value, the voltage regulation is % change of the secondary voltage from no-load to full load (rated)

$$\text{Voltage Regulation} = \frac{|E_{NL}| - |E_{FL}|}{|E_{FL}|} \times 100$$

E_{NL}: secondary voltage at no-load

E_{FL}: secondary voltage at full-load

- The voltage regulation depends on the power factor of the load on the secondary side
  - If the load is capacitive, the full-load voltage may exceed the no-load voltage, in which case the voltage regulation becomes negative

Measuring Transformer Impedances

- Open-circuit (no-load) test
  - Neglect R_1, X_{f1}, R_2, X_{f2}
  - Measure P_m (core loss), $|E_p|$, $|I_o|$ and $|E_s|$

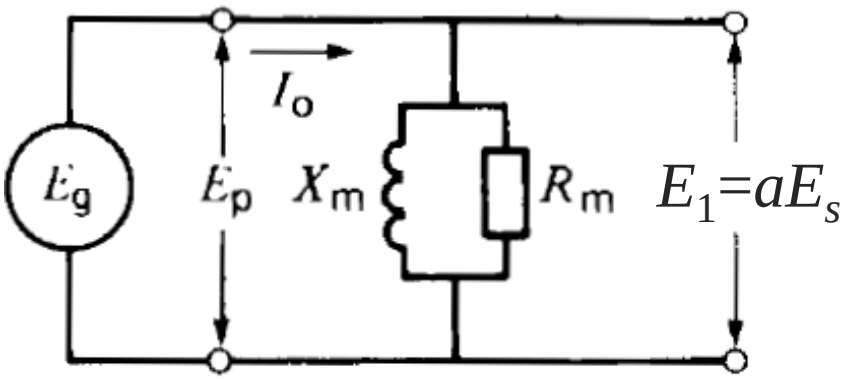

$$R_m = \frac{|E_p|^2}{P_m} \qquad |I_f| = \frac{|E_p|}{R_m}$$

$$|I_m| = \sqrt{|I_o|^2 - |I_f|^2}$$

$$X_m = \frac{|E_p|}{|I_m|}$$

$$a = \frac{N_1}{N_2} = \frac{|E_p|}{|E_s|}$$

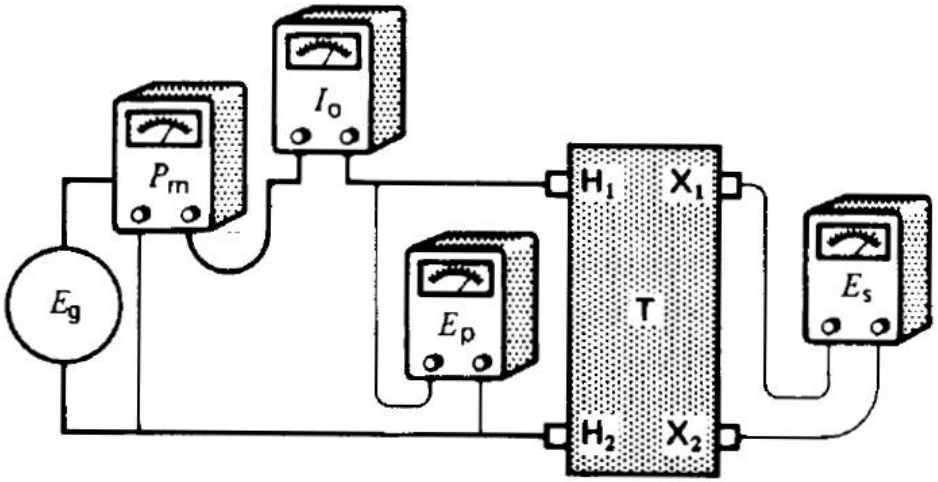

Figure 10.27
Open-circuit test and determination of R_m, X_m, and turns ratio.

- Short-circuit test
  - Apply a low voltage E_{SC} to the primary side to create I_{SC} less than the nominal value to prevent overheating and rapid change in winding resistance
  - Neglect R_m and X_m due to low core flux

$$|Z_p| = \frac{|E_{sc}|}{|I_{sc}|}$$

$$R_p = \frac{P_{sc}}{|I_{sc}|^2}$$

$$X_p = \sqrt{|Z_p|^2 - R_p^2}$$

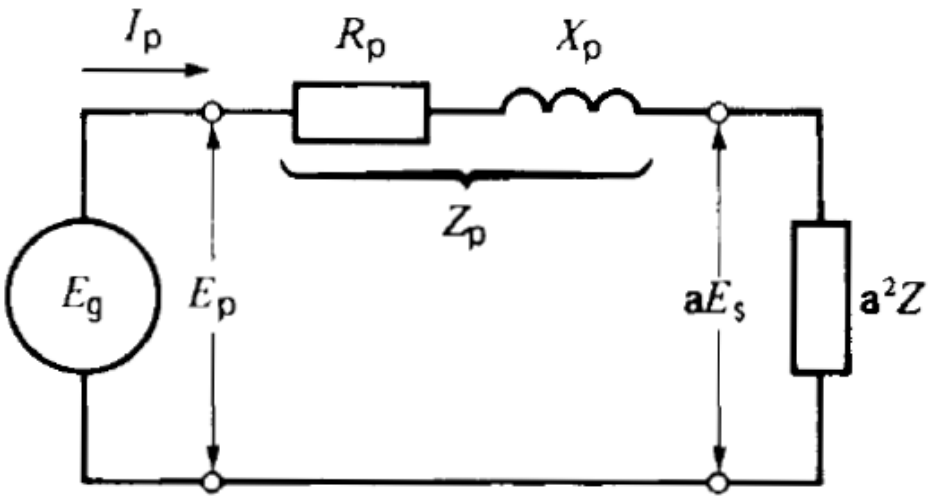

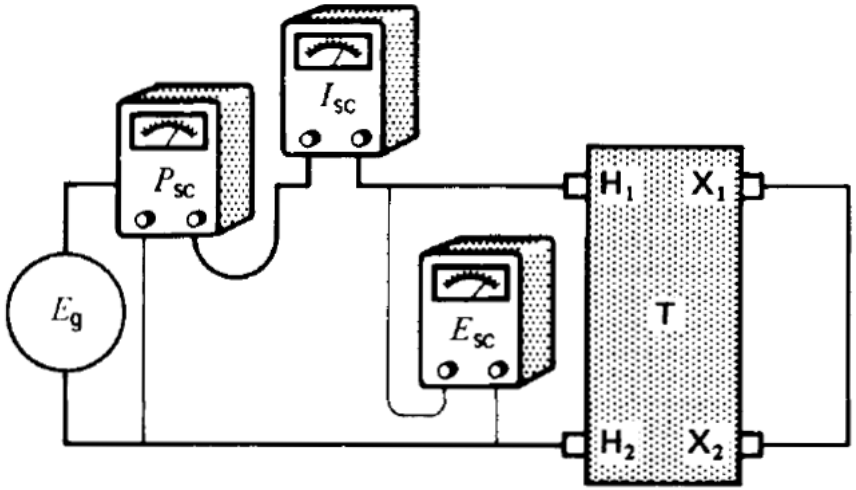

Figure 10.28
Short-circuit test to determine leakage reactance and winding resistance.

Construction of a power transformer

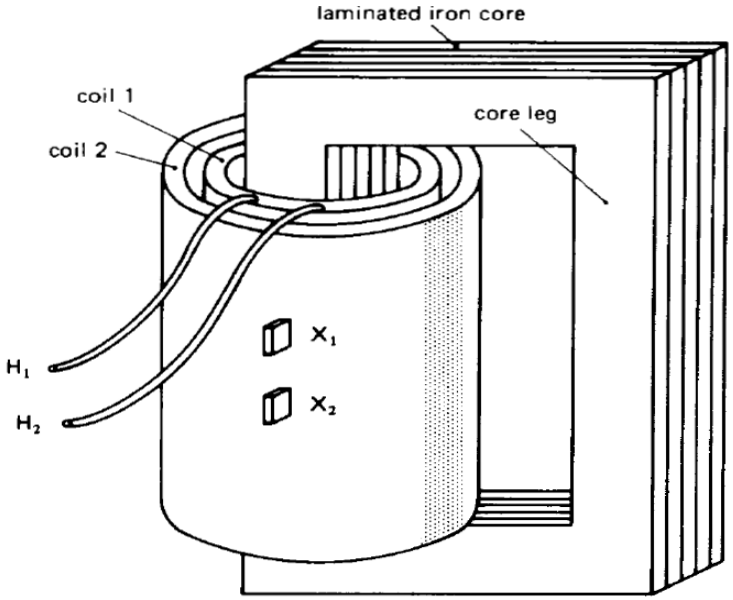

Figure 10.9a
Construction of a simple transformer.

- Core: made of iron for high permeability; laminated and high resistive to reduce iron losses
- Windings: the primary and secondary coils are wound closely on top of each other with careful insulation for tight coupling; the HV winding has more turns but uses a smaller size of conductor, so copper/aluminum of two windings are about the same

Standard terminal markings and polarity tests

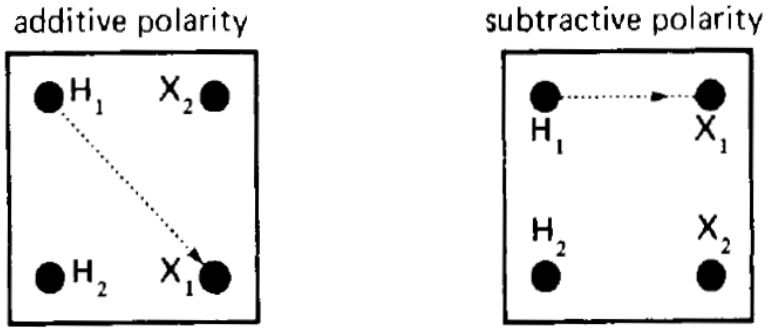

Figure 10.10
Additive and subtractive polarity depend upon the location of the H_1-X_1 terminals.

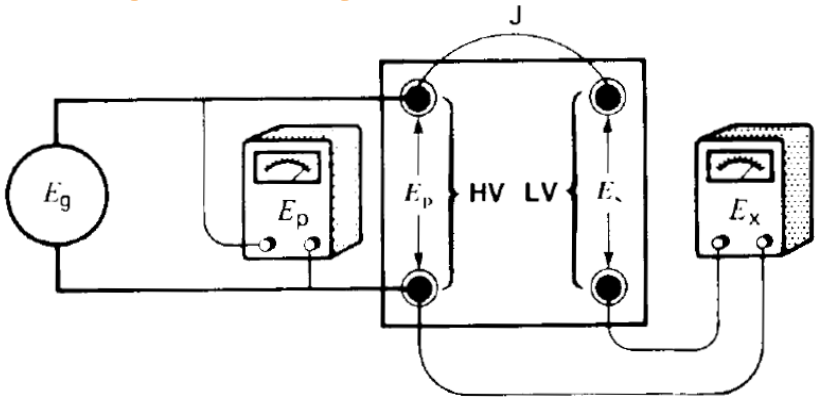

Figure 10.11
Determining the polarity of a transformer using an ac source.

- High-Voltage winding (H_1&H_2) and Low-Voltage winding (X_1& X_2)

  $E_{H1,H2}/E_{X1,X2}=E_H/E_X=N_H/N_X$
- Polarity test:
  1. Connect HV winding to a low voltage source E_g
  2. Connect a jumper J between any two adjacent HV and LV terminals
  3. Connect two voltmeters to as shown in Figure 10.11
  4. The polarity is additive if $|E_x|>|E_p|$ or, otherwise, is subtractive.

The Per-Unit System

- Quantity in **Per-Unit** = **Actual** quantity / **Base or nominal** value of quantity
- Why per-unit notations?

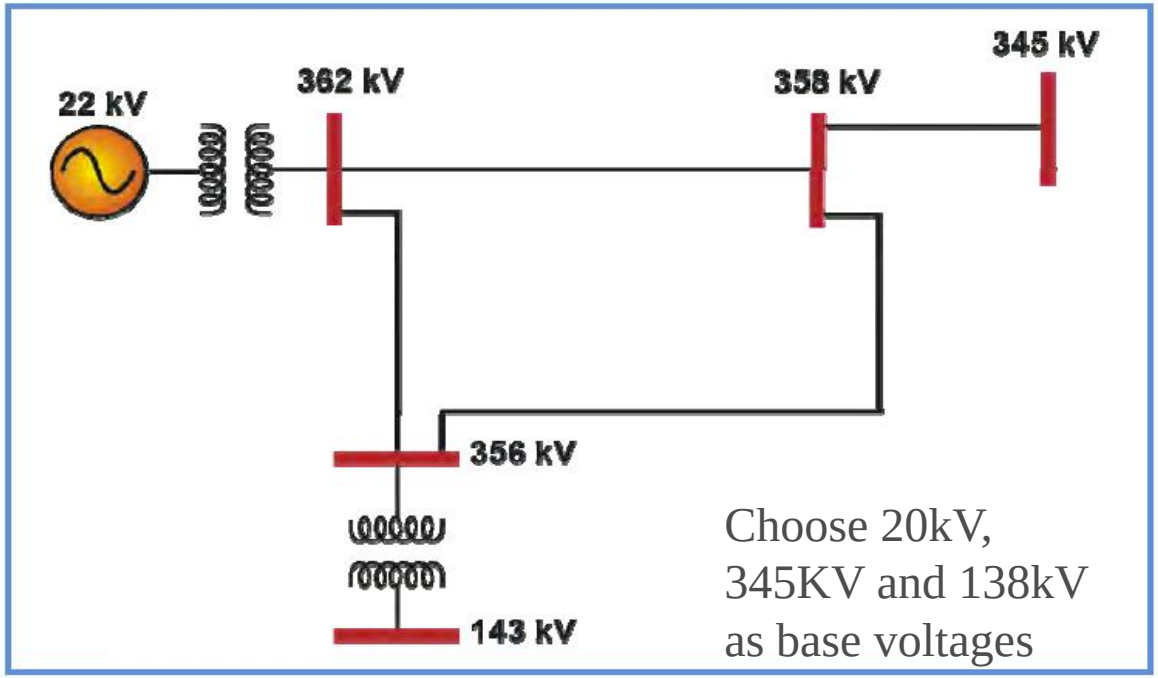

Figure 2-6. Example of the Usage of the Per-Unit System

  - Neglecting different voltage levels of transformers, lines and generators
  - Powers, voltages, currents and impedances are expressed as decimal fractions of respective base quantities

(Source: EPRI Dynamic Tutorial)

- Four base quantities are required to completely define a per-unit system

$$S_{pu} = \frac{S}{S_n} \qquad E_{pu} = \frac{E}{E_n} \qquad I_{pu} = \frac{I}{I_n} \qquad Z_{pu} = \frac{Z}{Z_n}$$

- We need to select two independent base quantities of the four and calculate the other two, e.g. selecting S_n and E_n

$$I_n = \frac{S_n}{E_n} \qquad Z_n = \frac{E_n}{I_n} = \frac{\left(E_n\right)^2}{S_n}$$

- For a transformer:
  - Usually, S_n, E_{pn}, E_{sn} and the total impedance Z_p (in p.u. or %) referred to the primary side are given.

$$I_{np} = \frac{S_n}{E_{np}} \qquad I_{ns} = \frac{S_n}{E_{ns}} \qquad a = \frac{N_p}{N_s} = \frac{E_{np}}{E_{ns}}$$

$$Z_{np} = \frac{E_{np}}{I_{np}} = \frac{\left(E_{np}\right)^2}{S_n} \quad (\Omega) \qquad Z_{ns} = \frac{E_{ns}}{I_{ns}} = \frac{\left(E_{ns}\right)^2}{S_n} \quad (\Omega)$$

$$Z_p(\Omega) = Z_p(\text{p.u.}) \times Z_{np}$$

Examples 10-5, 10-6, 10-7, 10-8 & 10-10

Autotransformer

- A conventional two-winding transformer can be changed to an autotransformer by connecting its two coils in series (note: 4 combinations).
- The connection may use a sliding contact to providing variable output voltage.

An autotransformer can be created by starting with a two winding transformer and then physically connecting the primary and secondary windings.

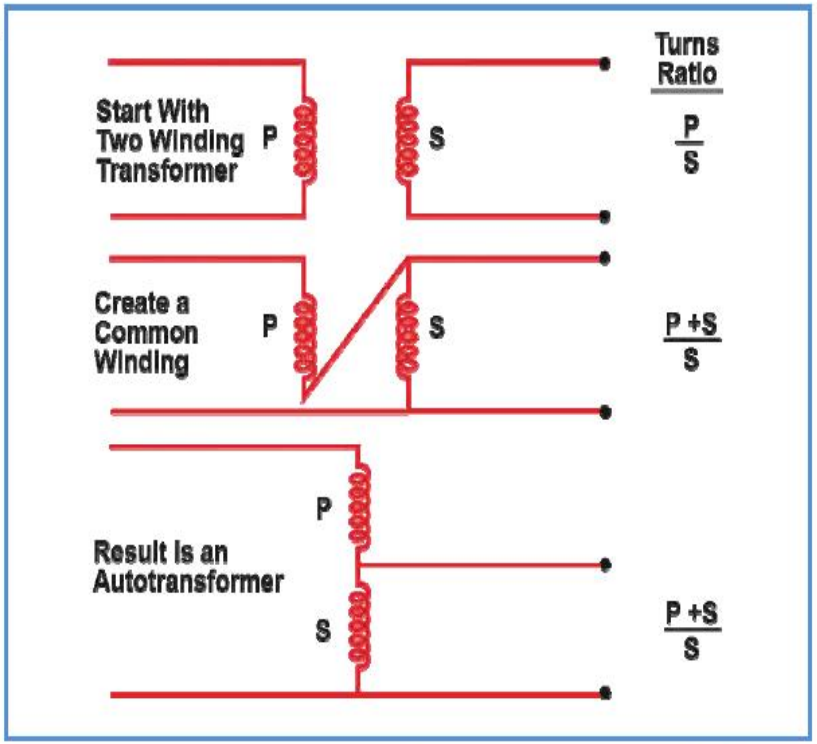

Figure 2-80. Autotransformer Evolution From a Two-Winding Transformer

(Source: EPRI Power System Dynamic Tutorial)

20MVA (115/69kV) McGraw-Edison Substation Auto-Transformer (Y-Y) (Source: http://www.tucsontransformer.com)

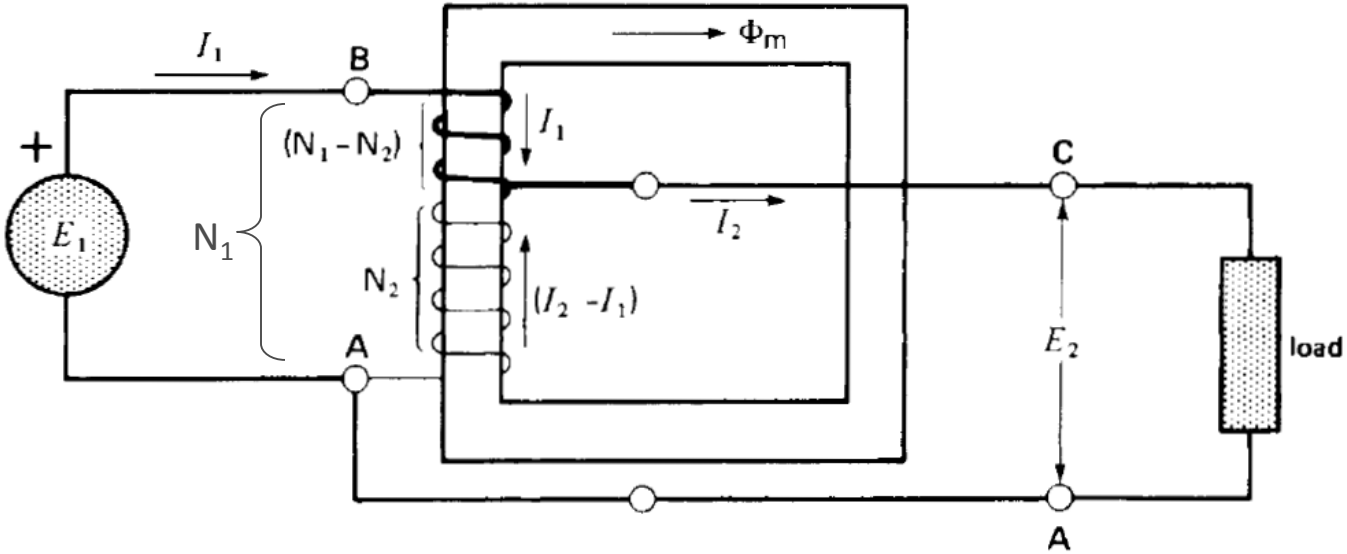

- The primary and secondary windings have a common terminal A, and hence are not isolated from each other

$$E_2/E_1=E_{CA}/E_{BA}=N_2/N_1 \quad \text{(There is always } N_1>N_2\text{)}$$

$$I_1N_1=I_2N_2 \Leftrightarrow \qquad I_1(N_1-N_2)=(I_2-I_1)N_2$$

$$E_1I_1=E_2I_2$$

- An autotransformer has a smaller size (or equivalently, a higher kVA rating for the same size) but loses insulation between primary and secondary windings

Conventional transformer connected as an autotransformer (Example 11-2)

- Reconnect the transformer to obtain
  - 600V / 480V
  - 600V / 720V
  - 120V / 480V
  - 120V / 720V

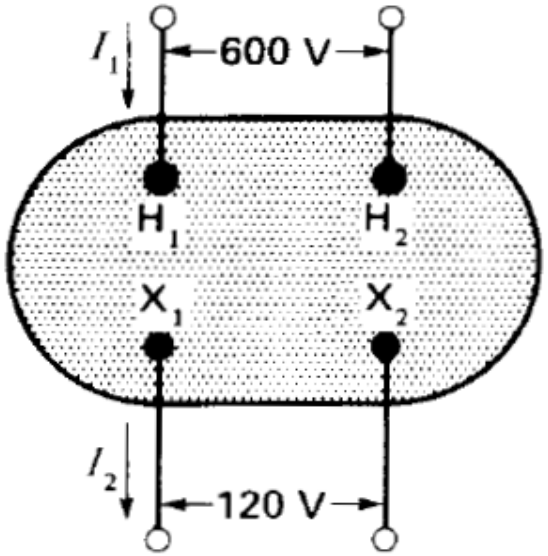

Figure 11.6
Standard 15 kVA, 600 V/120 V transformer.

- I_1=15000/600=25A
- I_2=15000/120=125A

When a transformer connects a source (on the primary side) with a load (on the secondary side), it is the load (current flows into terminal +) of the primary circuit and is the source (current flows out of terminal +) of the secondary circuit, so **two winding currents (I_1 and I_2) have opposite directions**.

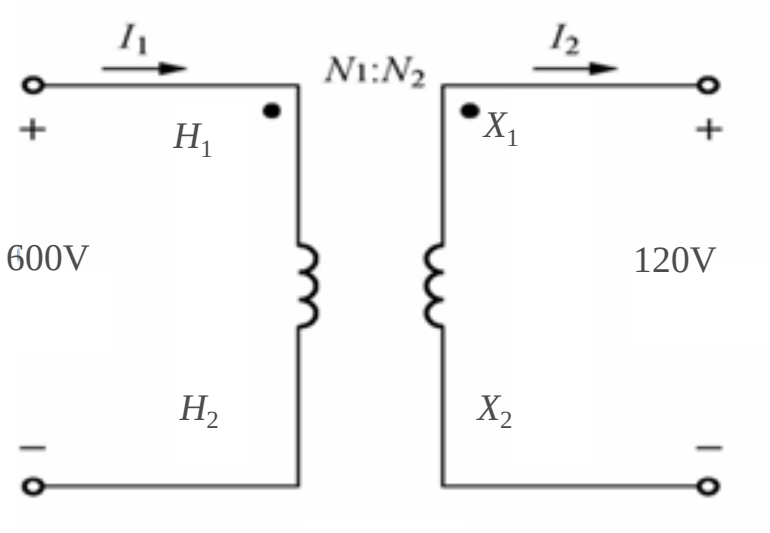

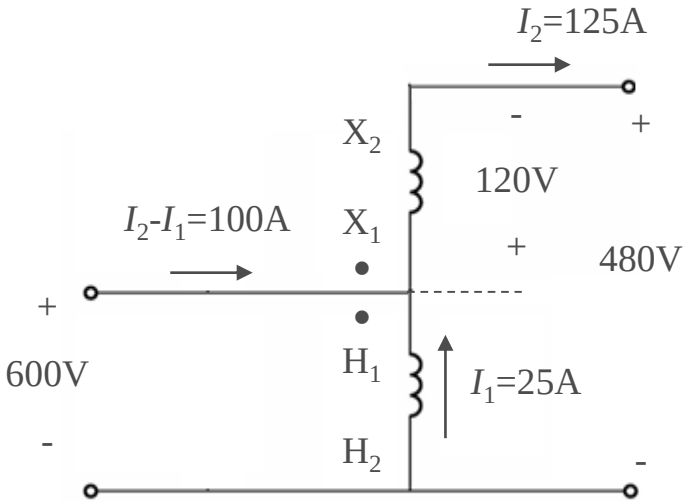

$|S_i|$=600×100=60kVA

$|S_o|$=480×125=60kVA

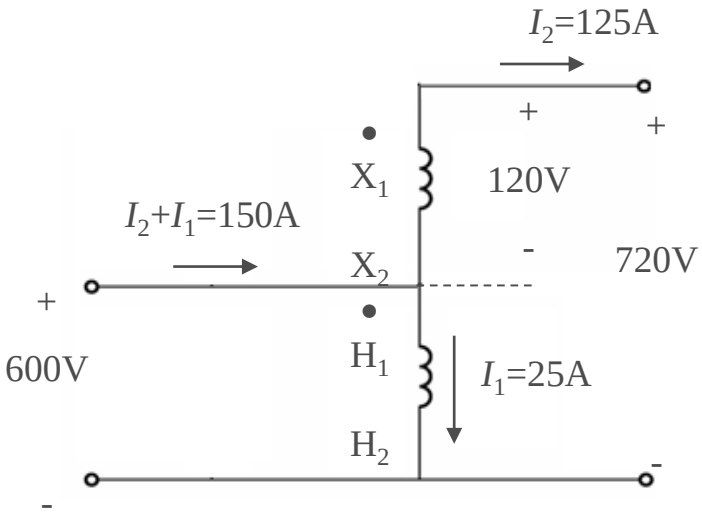

$|S_i|$=600×150=90kVA

$|S_o|$=720×125=90kVA

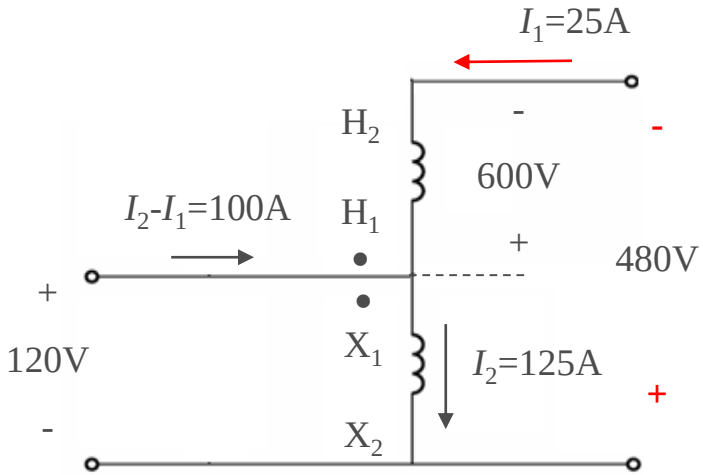

$|S_i|$=120×100=12kVA

$|S_o|$=480×25 =12kVA

The maximum apparent power $|S_{max}|=\max(|E_1|,|E_2|)\times(|I_1|+|I_2|)=(|E_1|+|E_2|)\times\max(|I_1|,|I_2|)$

Voltage Transformers and Current Transformers

- Voltage transformers (VTs), also called potential transformers (PTs), are installed on HV lines to measure line-to-neutral voltage

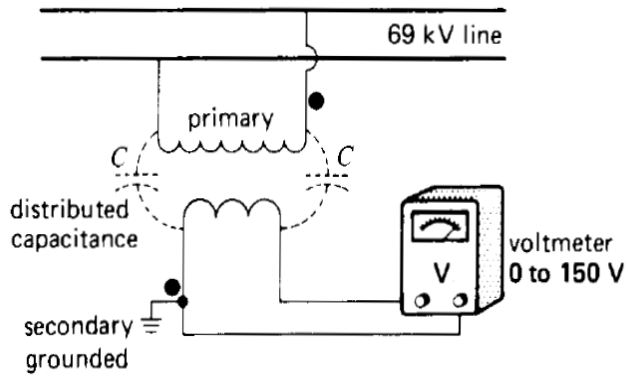

Figure 11.11
Potential transformer installed on a 69 kV line. Note the distributed capacitance between the windings.

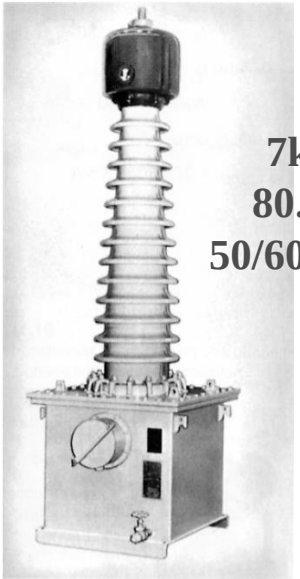

7kVA
80.5kV
50/60Hz PT

- Current transformers (CTs) are used to measure or monitor the current in a line for system measurement and protection

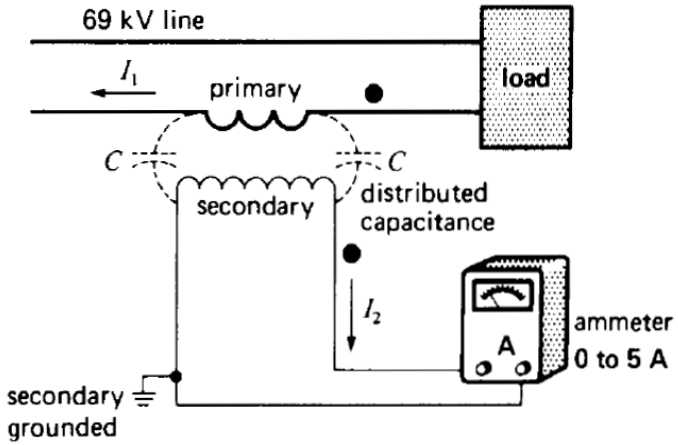

Figure 11.13
Current transformer installed on a 69 kV line.

5kVA,
100A/5A
60Hz CT

Three-Phase Transformers

- A bank of three single-phase transformers connected in Y or Δ configurations
  - Four possible combinations: Y-Y, Δ-Δ, Y-Δ and Δ-Y

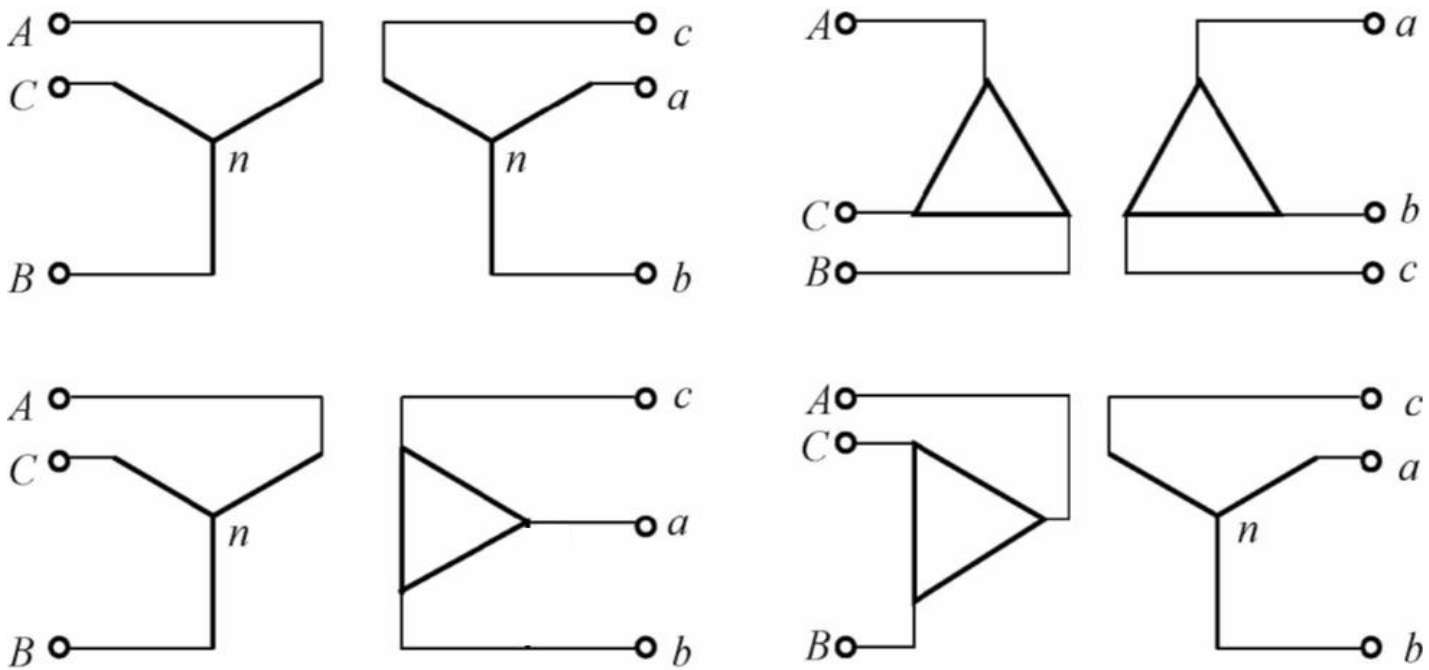

  - Y: lower insulation costs, with neutral for grounding, 3rd harmonics
  - Δ: more insulation costs, no neutral, no 3rd harmonics

3rd harmonics problem with three-phase transformers

- A Δ configuration provides a closed path for 3rd harmonics, or in other words, all triple harmonics are trapped in the Δ loop.

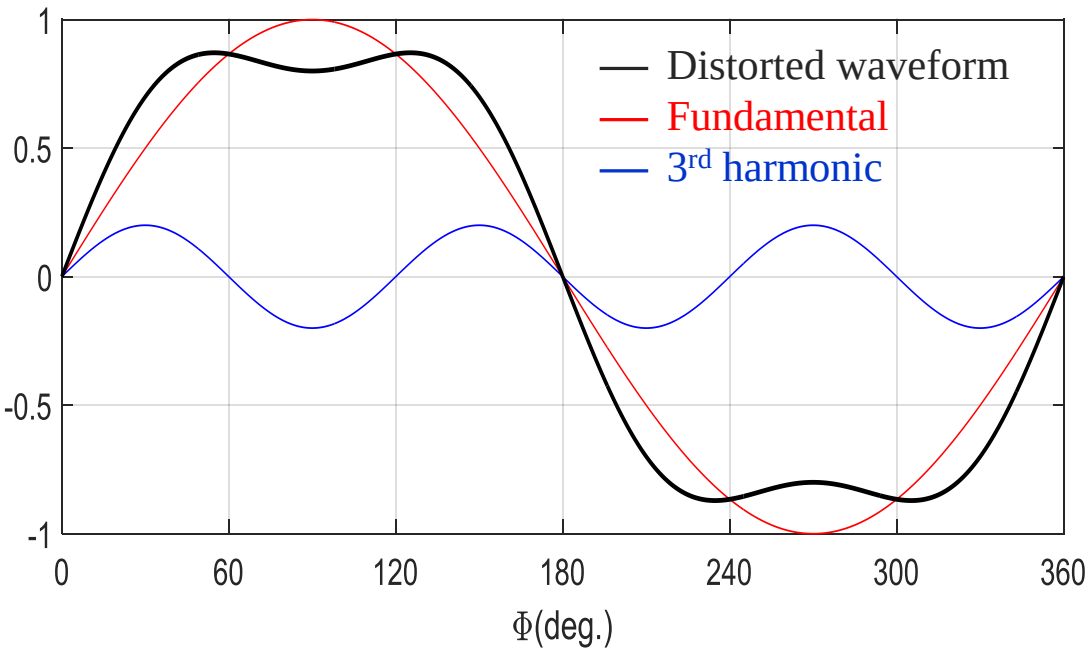

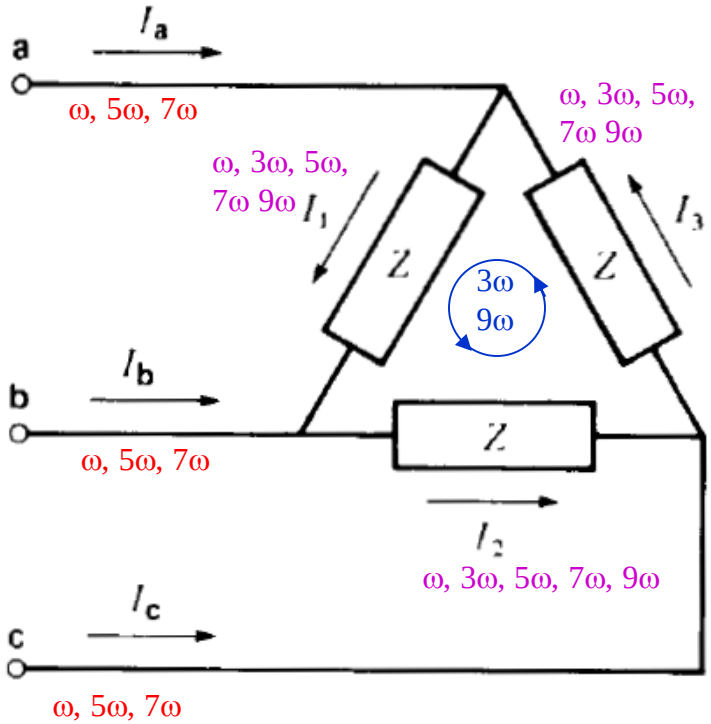

Three-phase transformers: Δ-Δ connection

- Each transformer, considered alone, acts as if it were placed in a single-phase circuit.
- Because E_{H1H2} and E_{X1X2} are in phase for each single transformer, line voltages E_{AB} with E_{12}, E_{BC} with E_{23}, and E_{CA} with E_{31} are in phase.
- A balanced three-phase load produces balanced line currents in line 1-2-3 and lines A-B-C
- The power rating is 3x of a single transformer.
- One transformer may be absent (i.e. open-delta connection) under maintenance or emergency conditions

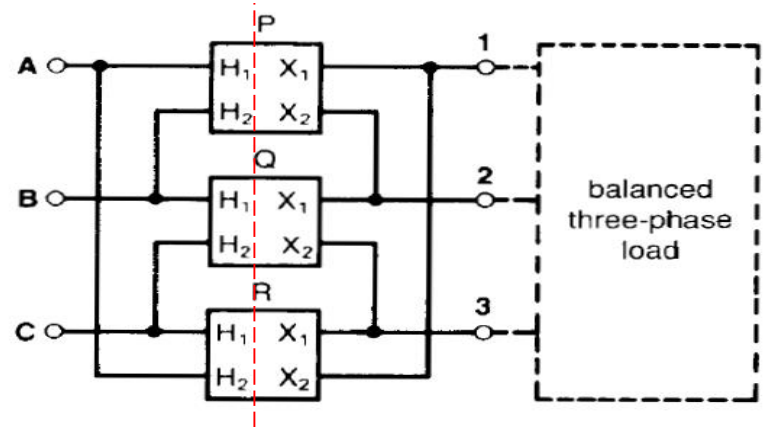

Figure 12.1
Delta-delta connection of three single-phase transformers. The incoming lines (source) are A, B, C and the outgoing lines (load) are 1, 2, 3.

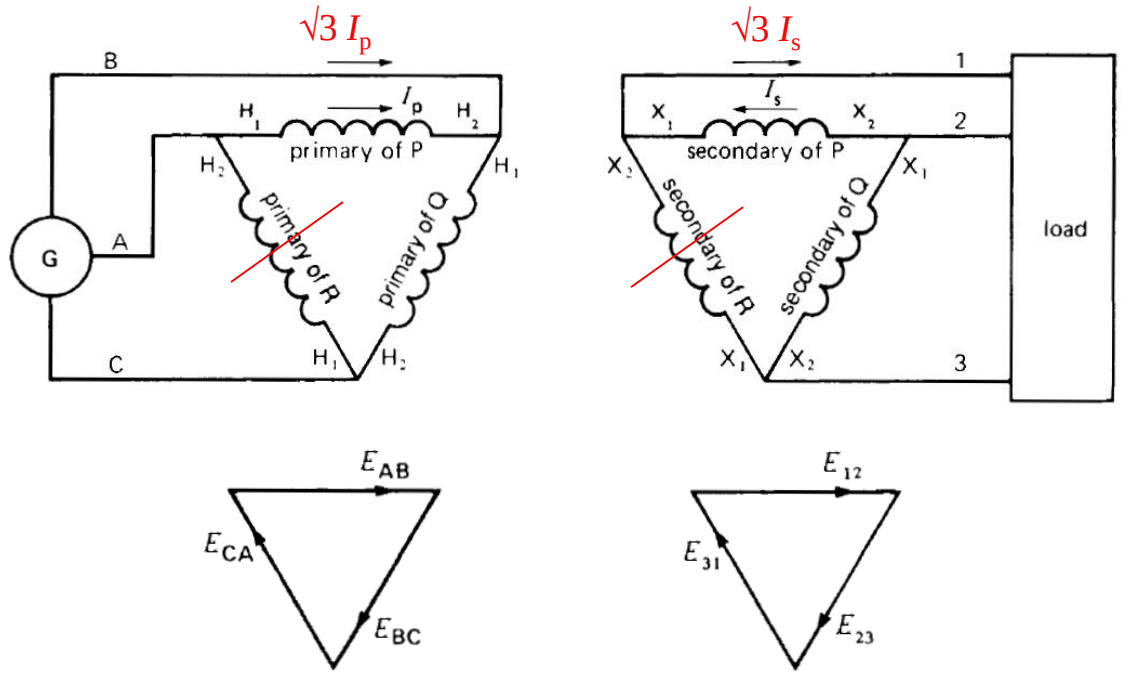

Three-phase transformers: Δ-Y (or Y-Δ) connection

- X_2 terminals of 3 secondary windings are connected to a common neutral N.
- Because E_{H1H2} and E_{X1X2} are in phase for each single transformer, E_{AB} with E_{1N}, E_{BC} with E_{2N}, and E_{CA} with E_{3N} are in phase.
- There is a 30° phase shift between the line voltages of the incoming (E_{AB}) and outgoing (E_{12}) lines
- Δ-Y is commonly used for voltage step-up transformers while Y-Δ is commonly used for voltage step-down transformers

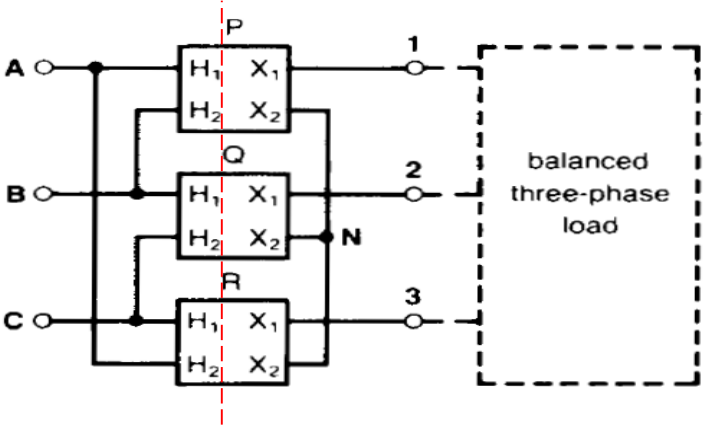

Figure 12.3
Delta-wye connection of three single-phase transformers.

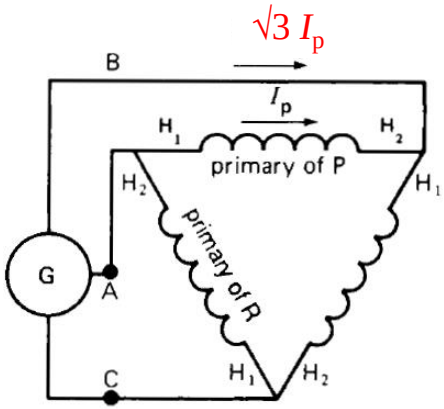

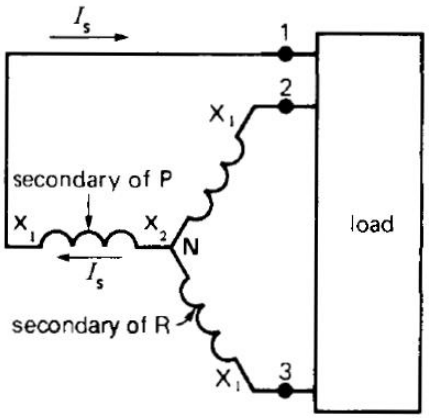

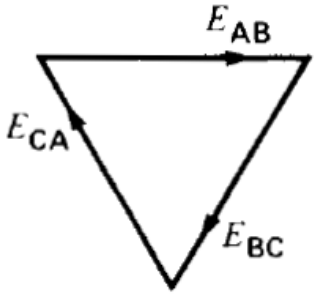

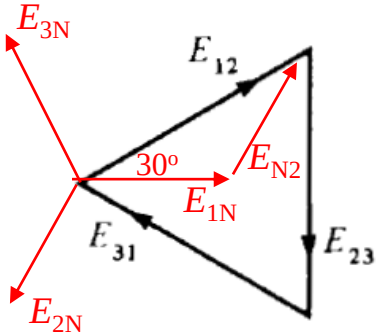

Three-phase transformers: Y-Y connection

- No phase shift between the incoming and outgoing line voltages
- Without a Δ configuration to trap the 3rd harmonic, it has seriously distorted voltages due to the 3rd harmonics.
- Two solutions:
  - Ground the neutrals of the primary winding and the source
  - Provide each transformer with a tertiary winding, and connect 3 tertiary windings in delta

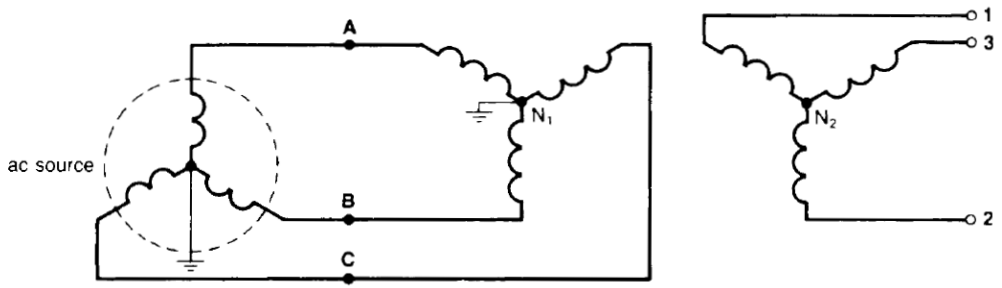

Figure 12.6
Wye-wye connection with neutral of the primary connected to the neutral of the source.

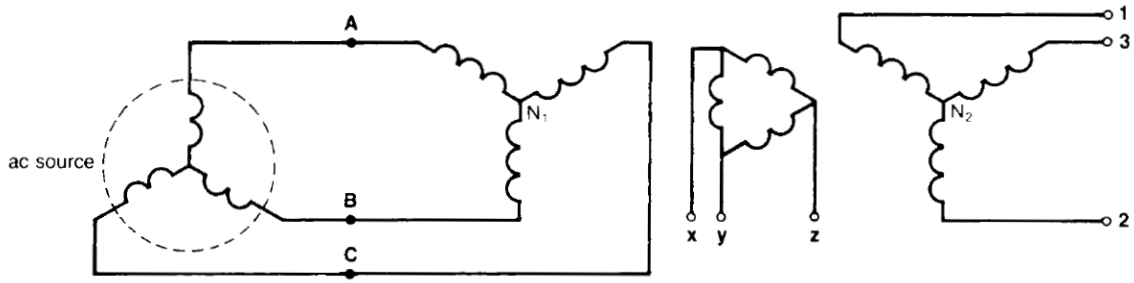

Figure 12.7
Wye-wye connection using a tertiary winding.

Phase-shifting Principle

- A 3-phase system can easily shift the phase angle of a voltage to create 2-, 6-, and 12-phase systems used in power electronic converters and controllers
- Phase shifting (performed by phase-shifting transformers) is also used in power flow control over long transmission lines

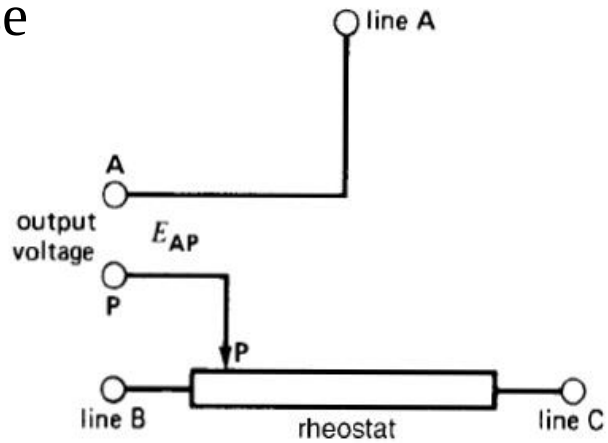

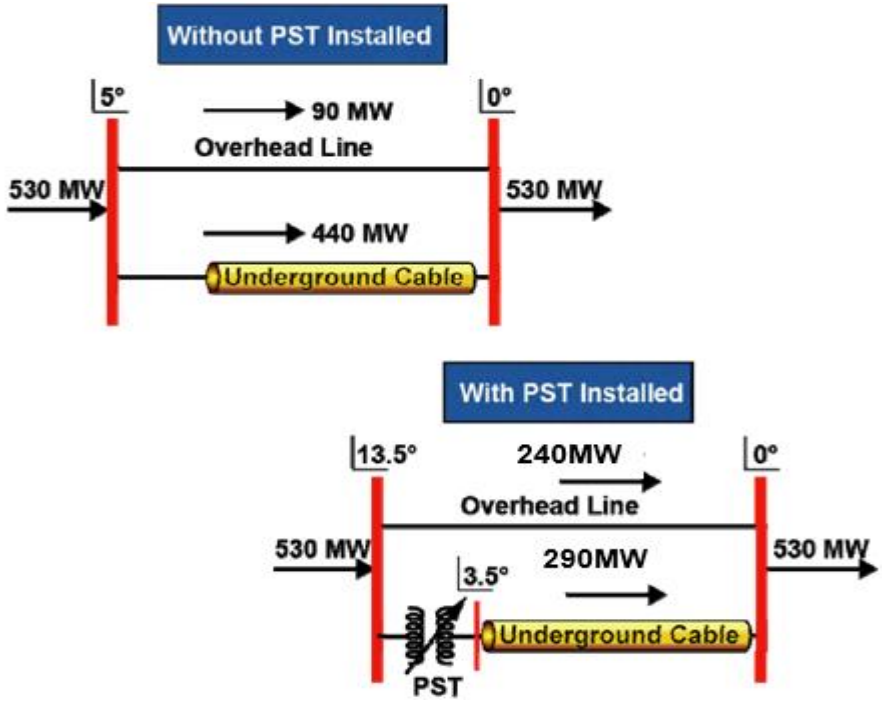

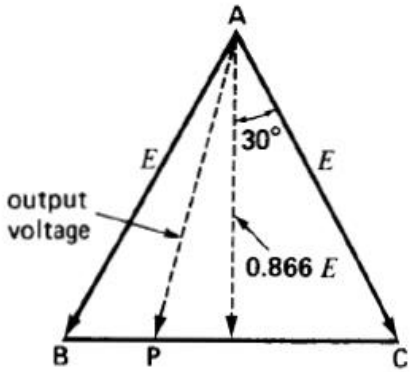

Figure 12.12
Voltage E_{AP} can be phase-shifted with respect to E_{AC} by means of a potentiometer.

Phase-shifting transformers

- A special type of 3-phase autotransformer that shits the phase angle between the incoming and outgoing lines without changing the voltage ratio.
- Twist all incoming line voltages by angle α (0~±20°) without changing their magnitudes

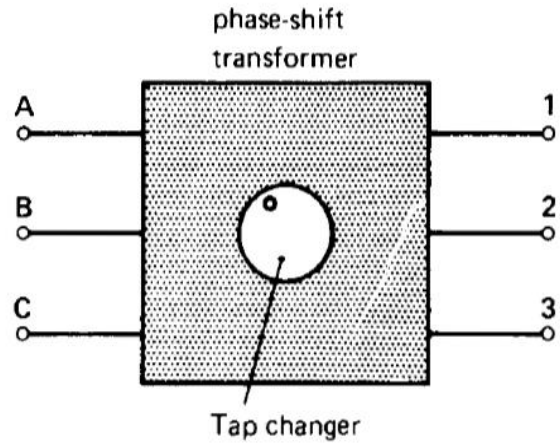

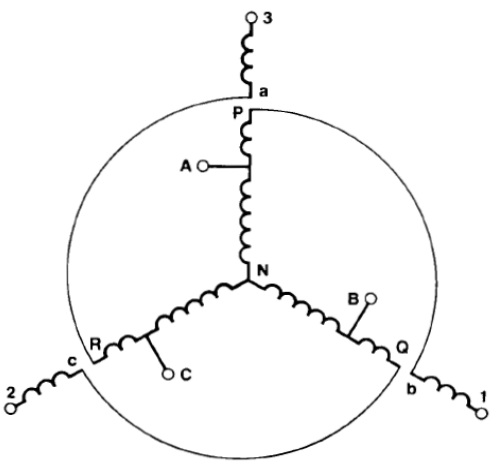

Figure 12.18b
Schematic diagram of the transformer in Fig. 12.18a.

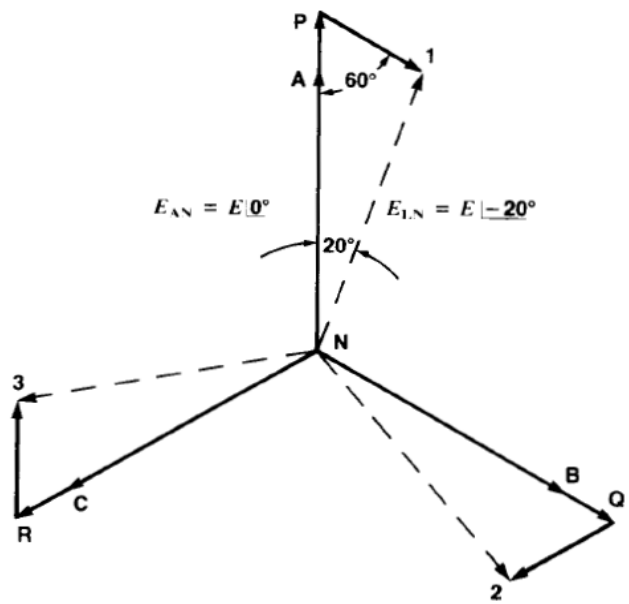

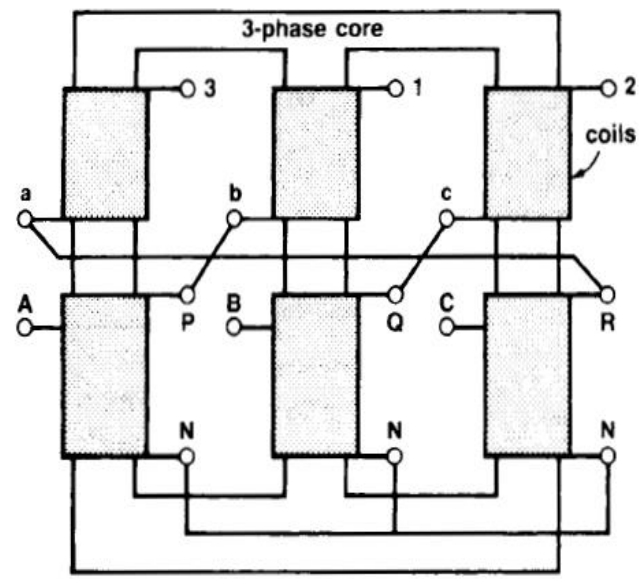

Figure 12.18a
Construction of a 3-phase-shift transformer. The incoming terminals are A, B, C; the outgoing terminals are 1, 2, 3.

Calculations involving 3-phase transformers

- For any 3-phase transformer bank, assume that the primary and secondary windings are both connected in Y configuration (if not, transform it to Y by $|Z_Y|=|Z_\Delta|/3$)

- Consider only one transformer (single phase) of the assumed Y-Y transformer bank
  - Its primary and secondary voltages are both the line-to-neutral voltages of the incoming and outgoing lines
  - Its nominal power rating and load are 1/3 of the 3-phase transformer bank

Examples 12-1, 12-2, 12-3, 12-6 & 12-7

Homework Assignment #3

- Read Chapters 9&10
- Questions:
  - Prove the polarity test on slide #21
  - 9-4, 9-5, 9-6, 9-7, 10-19, 10-28, 10-29, 10-30, 10-31
- Due date:
  - hand in your solution in the class on 10/5 (Mon) or
  - to Denis at MK 205 or by email (dosipov@vols.utk.edu) before the end of 10/5