ECE 325 – Electric Energy System Components
8- Fundamental Elements of Power Electronics

Instructor:

Kai Sun

Fall 2015

Content

(Materials are from Chapter 21)

- Power semiconductor switches
  - Diodes, thyristors, etc.
- DC-to-DC switching converters
- DC-to-AC switching converters

Introduction

- A power electronics system is to process and control the flow of electric energy by supplying voltages and currents in a form that optimally suits the loads
- A typical power electronics (PE) system:

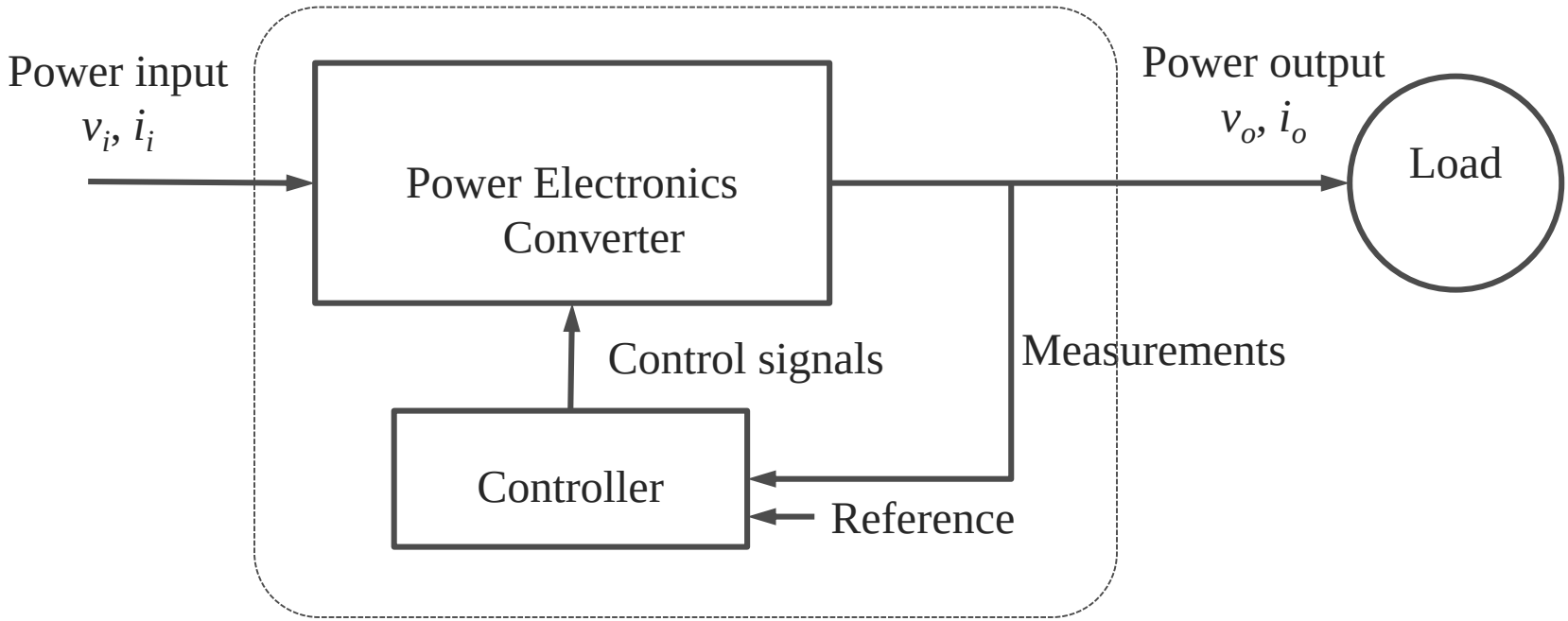

Applications of PE converters

- For DC voltage or current, a PE converter can regulate the magnitude at a desired level or adjust the magnitude to a desired level
- For AC voltage or current, a PE converter can adjust the magnitude and frequency and change the number of phases
- Applications:
  - Switched-mode (DC) power supplies
  - Uninterrupted power supplies (UPS)
  - Adjustable speed motor drives
  - High-voltage DC transmission (HVDC)
  - Battery-based utility energy storage
  - Electric vehicles (EVs) and hybrid electric vehicles (HEVs)
  - Renewable energy integration, e.g. solar PV and wind generation

Classification of PE converters

Four types of PE converters	Examples of application
DC-to-DC (boost up/step down):	Power supplies for electronic devices
DC-to-AC (inverter, to 1-phase or 3-phase AC)	The battery (discharging) and solar PV interfaces to the power grid
AC-to-DC (rectifier)	The battery (charging) interface to the power grid and power adapters for electronic devices
AC-to-AC	Variable-speed motor drive

- Two examples of AC-to-AC convertors:

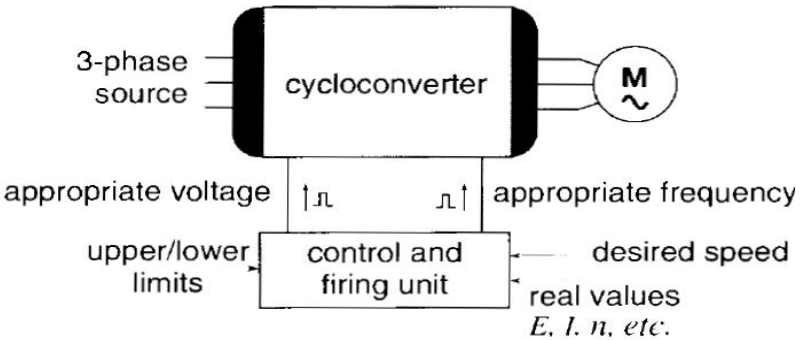

Figure 23.1
Variable-speed drive system using a cycloconverter (see Sections 23.3 and 23.5).

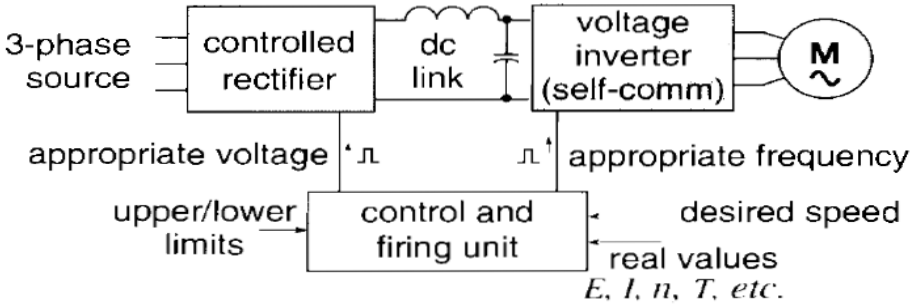

Figure 23.6
Variable-speed drive using a controlled rectifier and a self-commutated inverter fed from a dc link voltage source (see Section 23.10).

Power semiconductor switches

- Power semiconductor switches are the key functional components in a PE converter; other components are such as resistors, inductors and capacitors.
- Two states: ON (conducting) and OFF (open-circuit)
- Three types of power semiconductor devices in terms of the controllability
  - Diodes: their ON and OFF states are controlled by the polarity and magnitude of its voltage and the magnitude of its current.
  - Thyristors: they are turned ON by a control signal and turned OFF when its current goes to zero
  - Controllable switches: both ON and OFF states are controllable by control signals

Ideal Diode

- 2 terminals: A (anode) and K (cathode)
- It starts to conduct (ON) as long as the voltage E_{AK} is forward biased
- When ON, it has not voltage drop
- It turns OFF and has no leakage current when E_{AK} is reverse biased
- Both turn ON and OFF switches are instantaneous

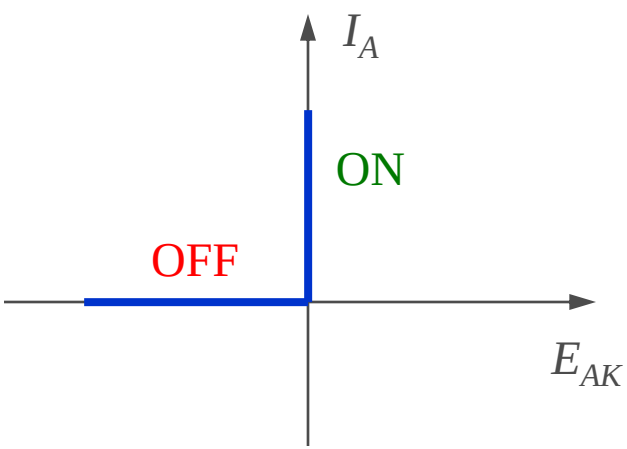

Ideal I-V characteristics

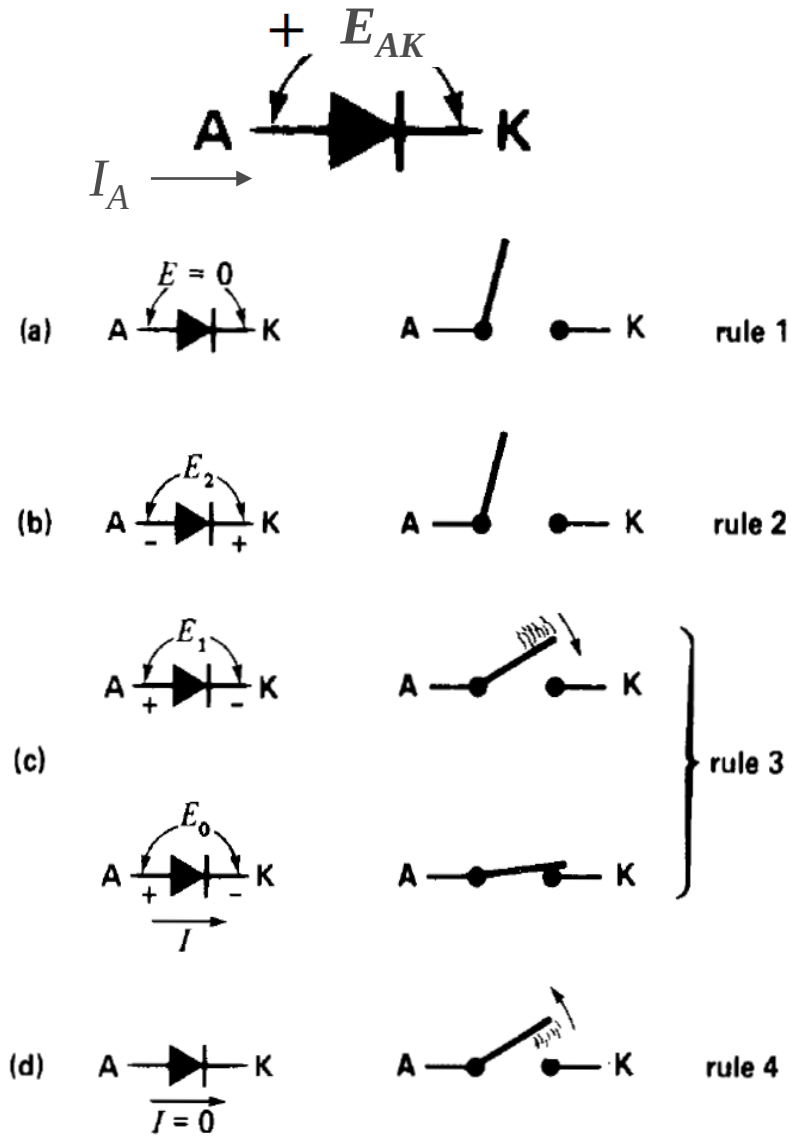

Figure 21.9
Basic rules governing diode behavior.

Practical Diodes

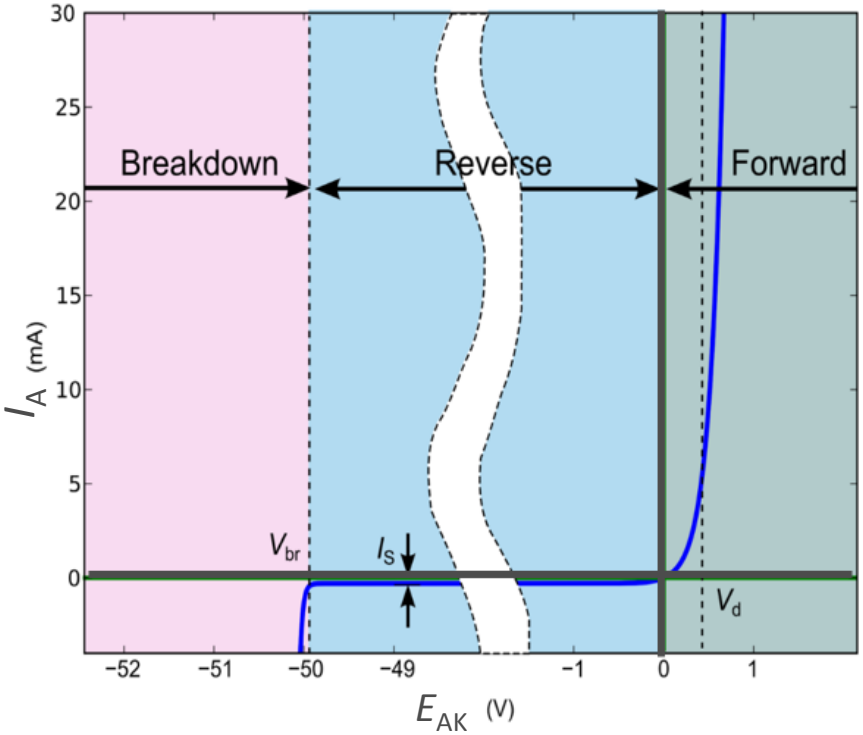

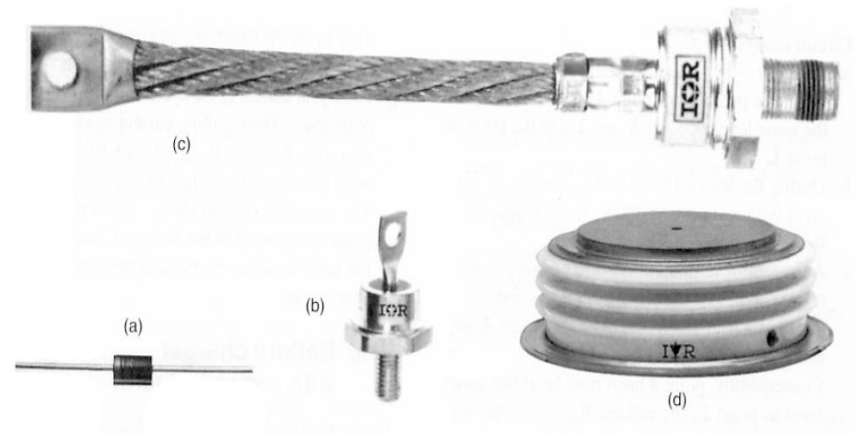

Figure 21.10
a. Average current: 4 A; PIV: 400 V; body length: 10 mm; diameter: 5.6 mm.
b. Average current: 15 A; PIV: 500 V; stud type; length less thread: 25 mm; diameter: 17 mm.
c. Average current: 500 A; PIV: 2000 V; length less thread: 244 mm; diameter: 40 mm.
d. Average current: 2600 A; PIV: 2500 V; Hockey Puk; distance between pole-faces: 35 mm; diameter: 98 mm.
(*Photos courtesy of International Rectifier*)

Real I-V Characteristics

- When a diode is forward biased with a voltage about 0.7V or more is applied, it acts like a closed switch with a negligible voltage drop <1.5V.
- When a diode is reverse biased, it has a negligible current flowing through
- At very large reverse bias, beyond its peak inverse voltage (PIV, 50V-4000V), the diode breaks down, begins to conduct in reverse and is usually damaged

Thyristors

- Usually referred to semiconductor controlled rectifier (SCR)
- 3 terminals: A (anode), K (cathode) and G (gate)
- A thyristor behaves like a diode except that the instant of conduction can be controlled by "G"; that enables converting DC to AC
- Two conditions to conduct
  1. $E_{AK}>0$
  2. Positive current I_g flows into "G" for at least a few microseconds
- Once conduction starts, "G" will lose control and conduction will continue until the current I_A into "A" falls to zero
- If "G" and "K" are short-circuited, the thyristor is blocked
- A thyristor is partially controllable

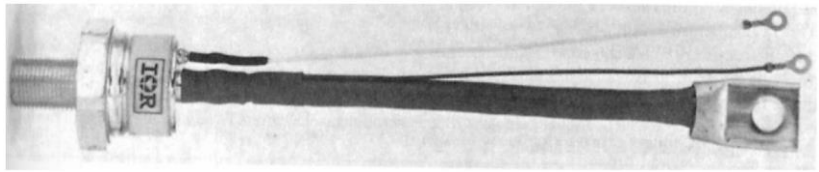

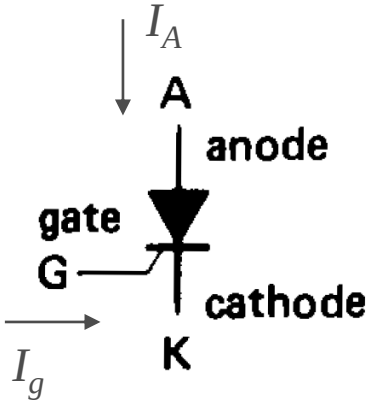

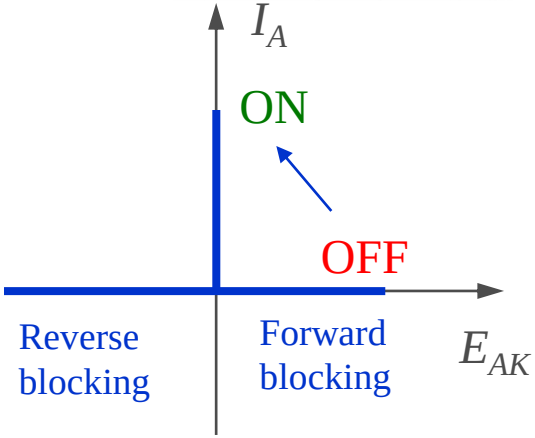

Ideal I-V characteristics

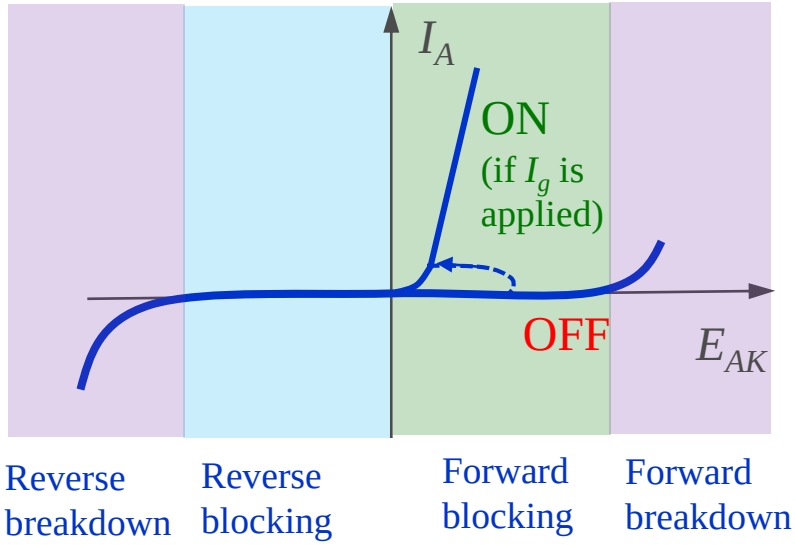

Real I-V characteristics

Principles of gate firing

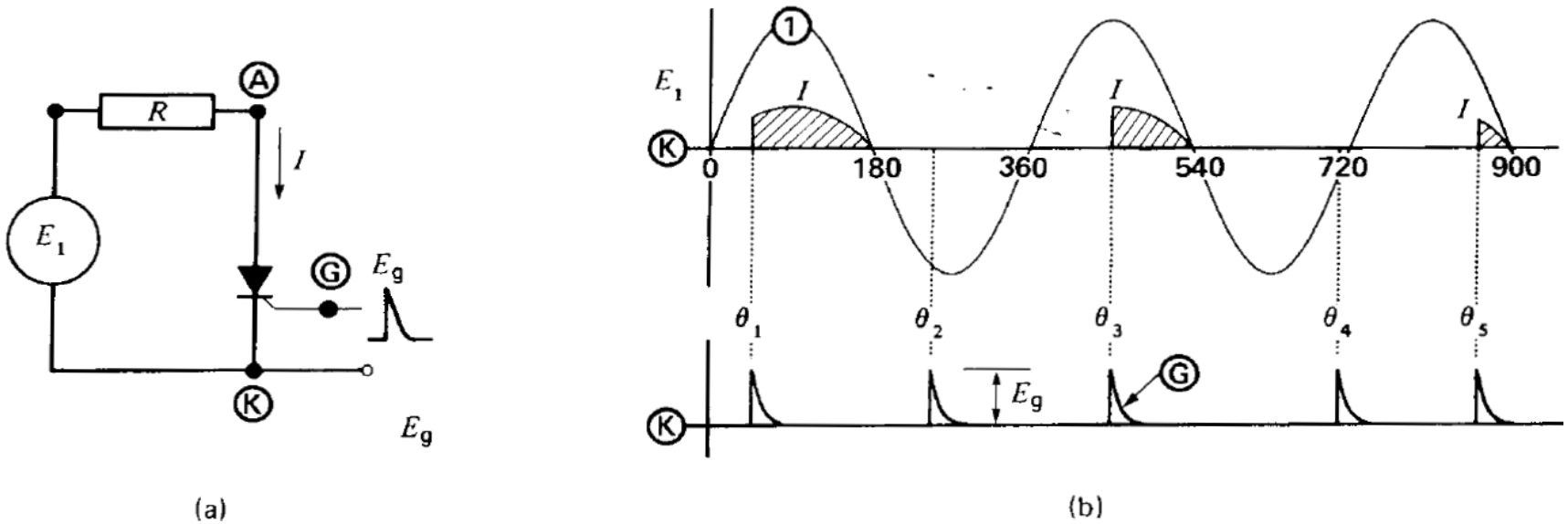

- We can control the current in an AC circuit by delaying the gate (G) pulses with respect to the start of each positive half-cycle.
  - If the pulses occur at the very beginning of each half-cycle, conduction lasts for 180° like a diode
  - If the pulses are delayed by θ, current only flows during the remaining 180°-θ

Controllable power semi-conductor switches

- With reverse voltage blocking capability
  - GTO (Gate-turn-off thyristor)
  - IGBT (Insulated gate bipolar transistor)

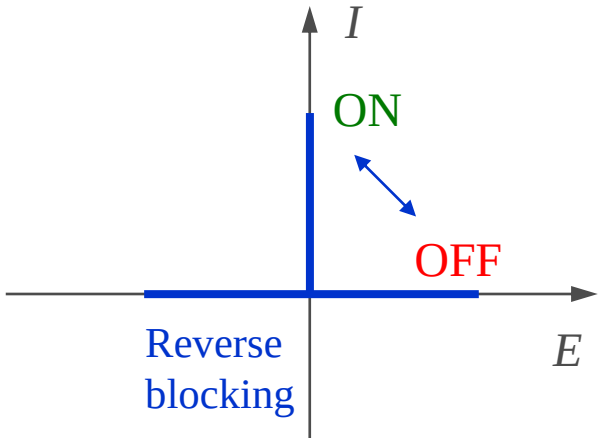

Ideal I-V characteristics

- Without reverse voltage blocking capability
  - BJT (Bipolar junction transistor)
  - MOSFET (Metal-oxide-semiconductor field effect transistor)

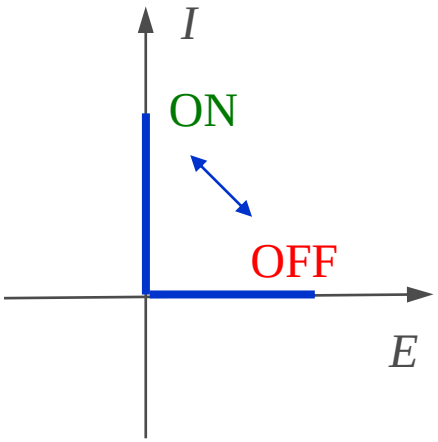

Ideal I-V characteristics

MOSFET

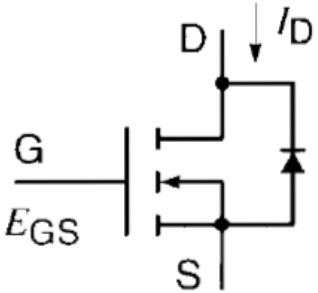

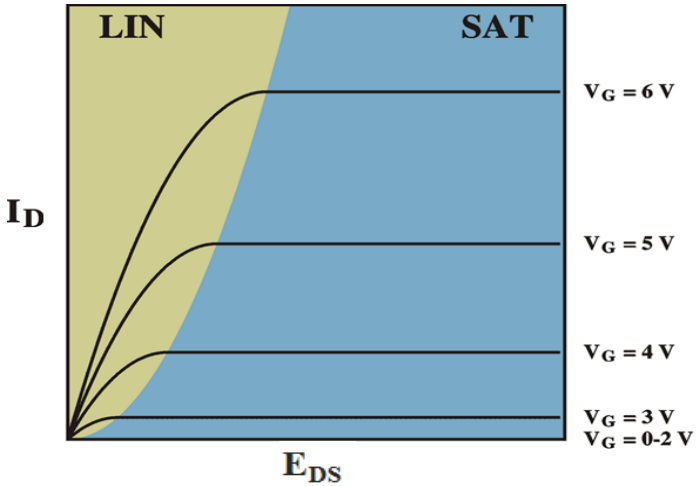

Real I-V characteristics

Ideal switch

- Switch from ON to OFF, or vice versa, instantaneously when triggered by the control signal
- Vanishingly small power required from the control signal to trigger the switch
- When OFF, block arbitrarily large forward and reverse voltages with zero current flow
- When ON, conduct arbitrarily large currents with zero voltage drop

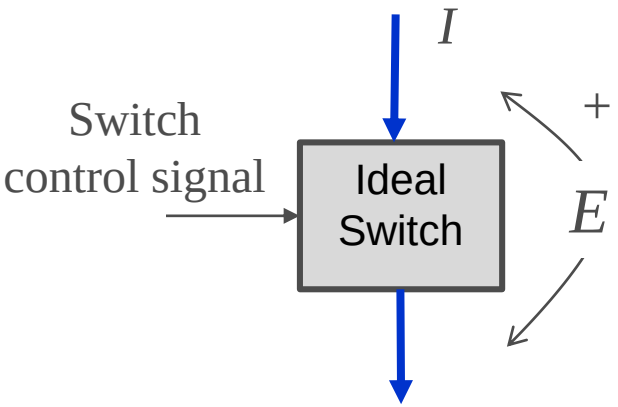

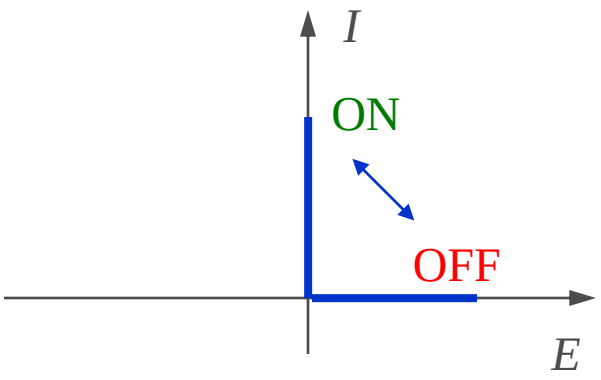

Real switches

- Have OFF-state leakage current
- Have ON-state voltage (relevant to conducting losses)
- Limited switching frequency
- Limited forward- and reverse-voltage blocking capability
  - Fewer switches in series are needed with a higher voltage blocking capability
- Limited ON-state current rating
  - Fewer switches in parallel are needed with a higher ON-state current rating
- Control power is required for switches
  - The control circuit can be simplified with less control power
- Limited *dE/dt* and *dI/dt* ratings
  - Need additional circuit to limit |*EI*|

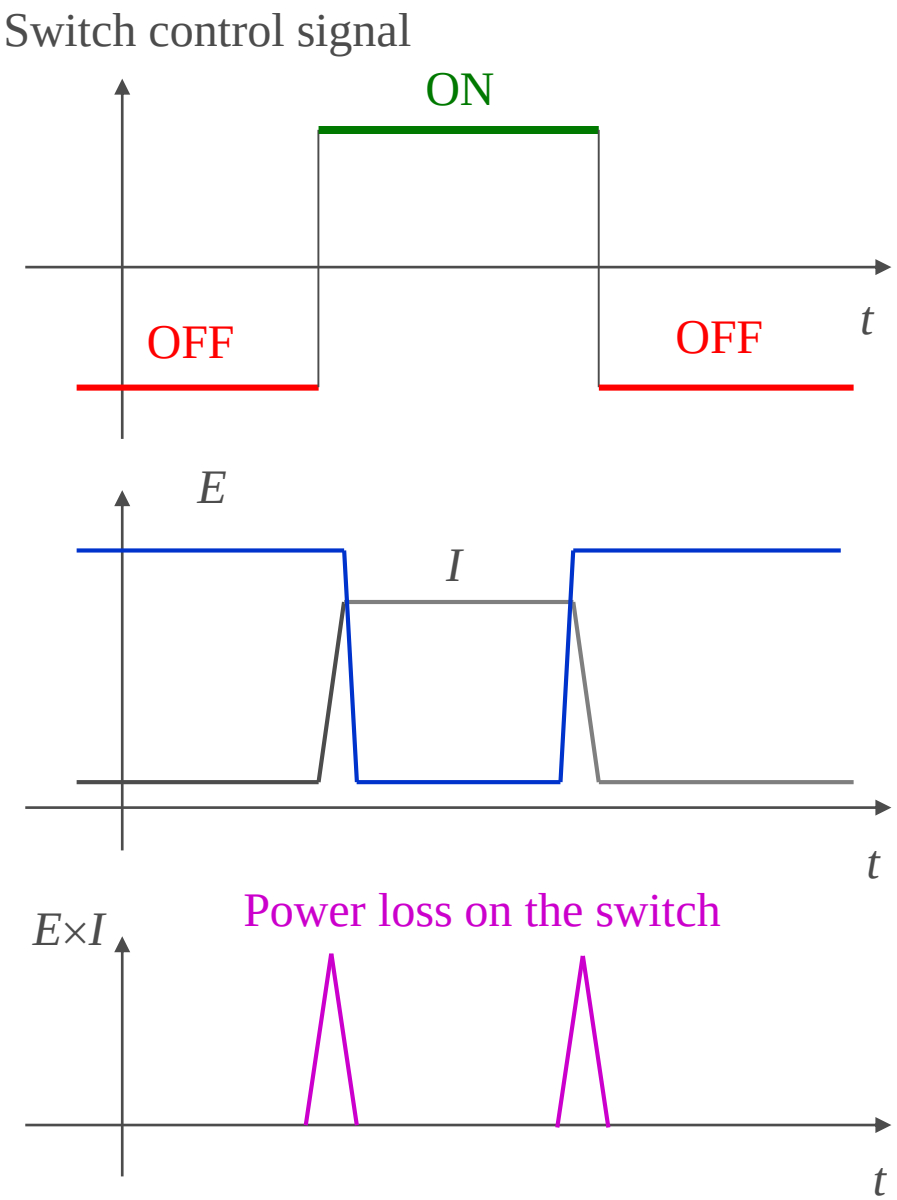

Step-down DC-to-DC converter (buck chopper)

- The voltage step-up/step-down in AC systems can easily be done with a transformer, but in DC systems, a DC-to-DC switching converter is required using a different approach
- To transfer power from a high-voltage DC source E_S to a lower-voltage DC load E_o, one solution is to connect them by an inductor and to open and close the circuit periodically
  - When switch close, energy is transferred from E_S to E_o during time of closure T_1

$$E_S - E_o = L\frac{di}{dt} \quad \Rightarrow \quad i = \frac{E_S - E_o}{L}t$$

$$i(T_1) = \frac{E_S - E_o}{L}T_1 \overset{\Delta}{=} I_a \qquad W = \frac{1}{2}LI_a^2$$

  - When the switch opens, energy W stored in the inductor is dissipated in the arc across the switch, so efficiency of power transfer is poor

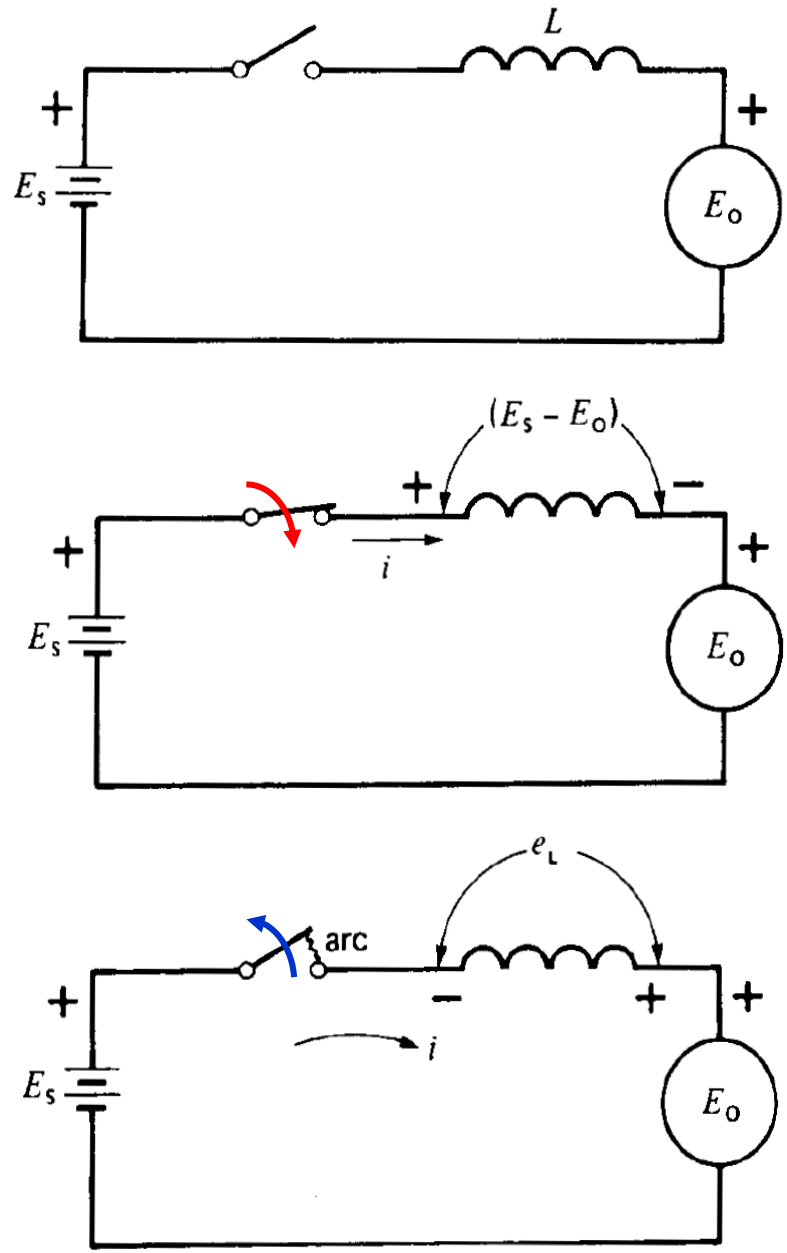

- To deliver energy W to load E_o when the switch opens, add an diode

$$L\frac{di}{dt}+E_o=0 \quad \Rightarrow \quad i-I_a=-\frac{E_o}{L}t$$

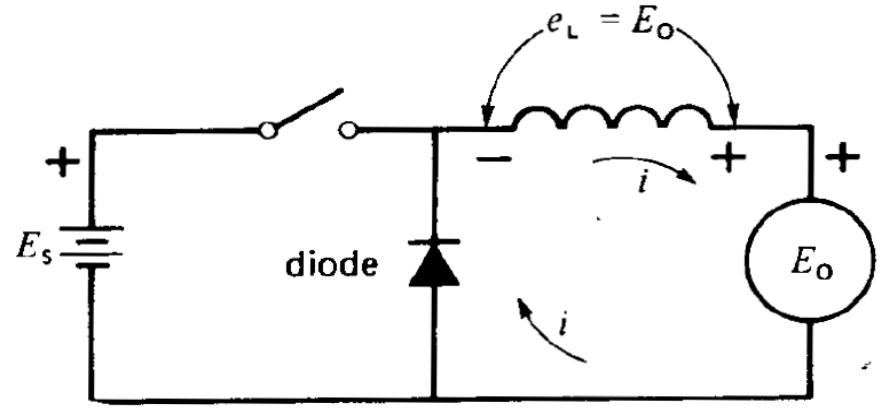

If i takes T_2 to become zero

$$I_a=\frac{E_S-E_o}{L}T_1$$

$$I_a=\frac{E_o}{L}T_2$$

$$E_oT_2=(E_S-E_o)T_1$$

A+ = A-

$$\frac{T_2}{T_1}=\frac{E_S-E_o}{E_o}$$

- The inductor absorbs energy at a relatively high voltage (E_S-E_o) and delivers it at a lower voltage E_o
- This circuit enables us to transfer energy without incurring any losses
- The switch is actually a GTO, MOSFET or IGBT, whose ON/OFF state is controlled by a signal applied to the gate.

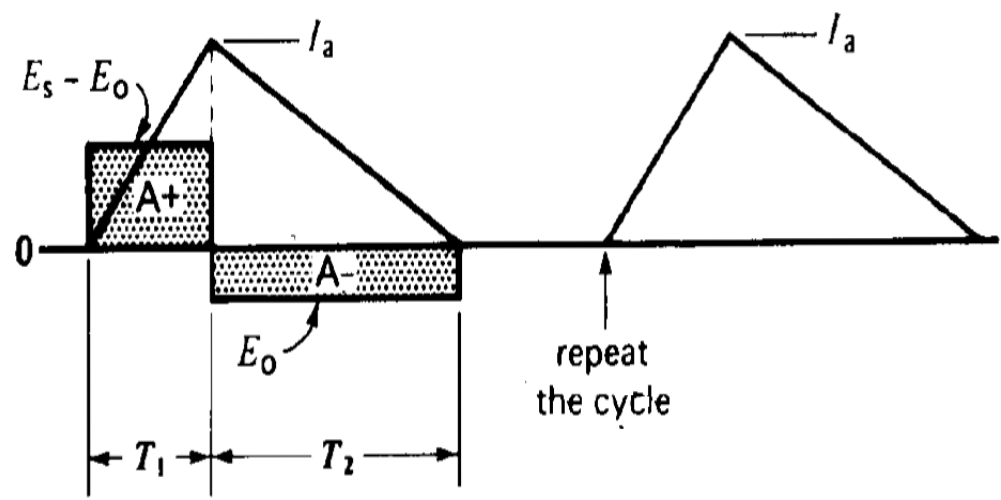

Rapid switching

- Open and close the switch rapidly so that the current increases and decreases in a narrow range between I_a and I_b
  - When the current falls to I_b (after T_b), the switch recloses
  - When the current reaches I_a (after T_a), the switch reopens
- Duty cycle:

$$D=T_a/(T_a+T_b)=T_a/T \quad <1$$

- Average DC current to the load:

$$I_o=(I_a+I_b)/2$$

- Average DC current from the source:

$$I_S=I_o(T_a/T)=I_oD \quad \Rightarrow I_o=I_S/D$$

- If there is no power loss

$$E_SI_S=E_oI_o=E_oI_S/D \quad \Rightarrow E_o=DE_S$$

DC output voltage can simply be controlled by varying the duty cycle

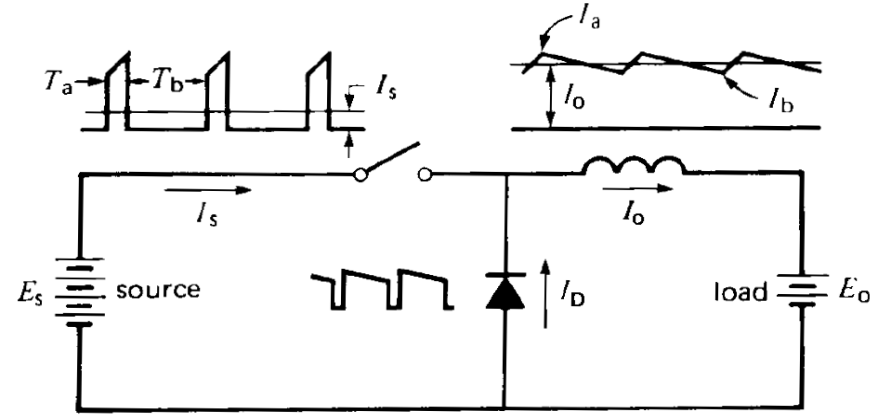

Figure 21.60a
Currents in a chopper circuit.

$$I_a - I_b = \frac{E_S - E_o}{L} T_a = \frac{E_o}{L} T_b$$

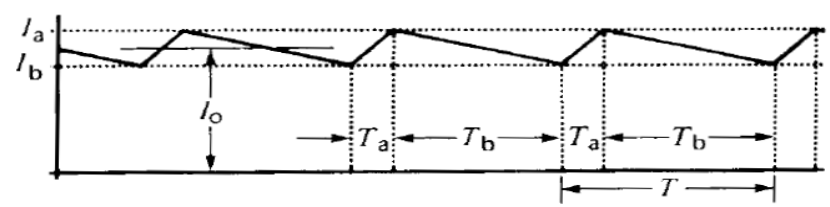

Figure 21.60b
Current in the load.

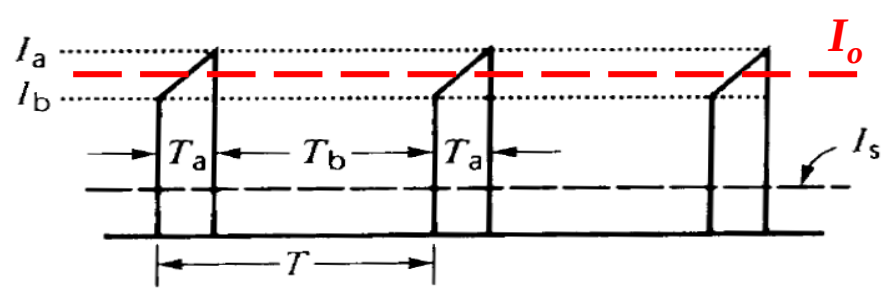

Figure 21.60c
Current pulses provided by the source.

Impedance transformation

Duty cycle $D<1$

$I_o=I_S/D \qquad E_o=DE_S$

$R_o=E_o/I_o$

$R_S=E_S/I_S=(E_o/D)/(I_oD)$

$=R_o/D^2$

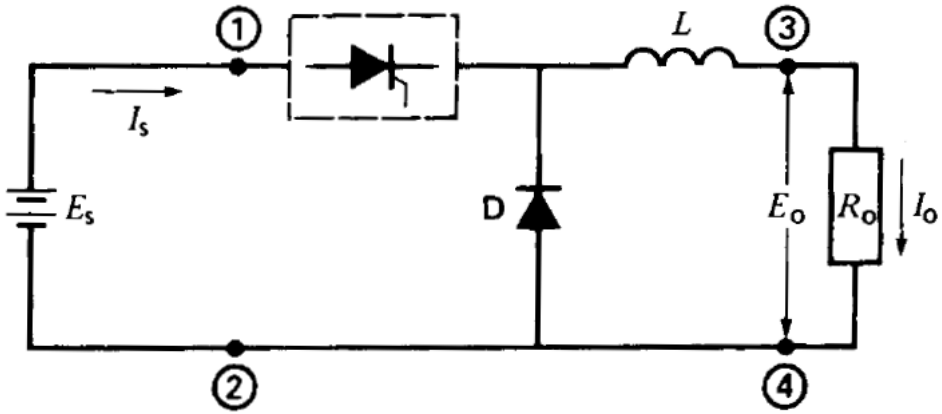

Figure 21.62
A chopper can make a fixed resistor R_o appear as a variable resistance between terminals 1-2.

- A step-down DC-to-DC converter (chopper) can transform the resistance of a fixed resistor to a higher value depending on *D*.
  - It behaves like a DC transformer whose turns ratio is *D*
  - Unlike a transformer allowing power to flow bi-directionally, a step-down chopper can transfer power only from the high-voltage side to the low-voltage side

Basic 2-quadrant DC-to-DC converter

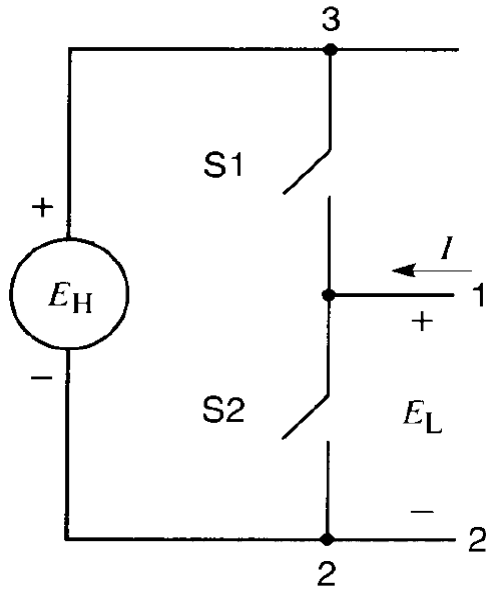

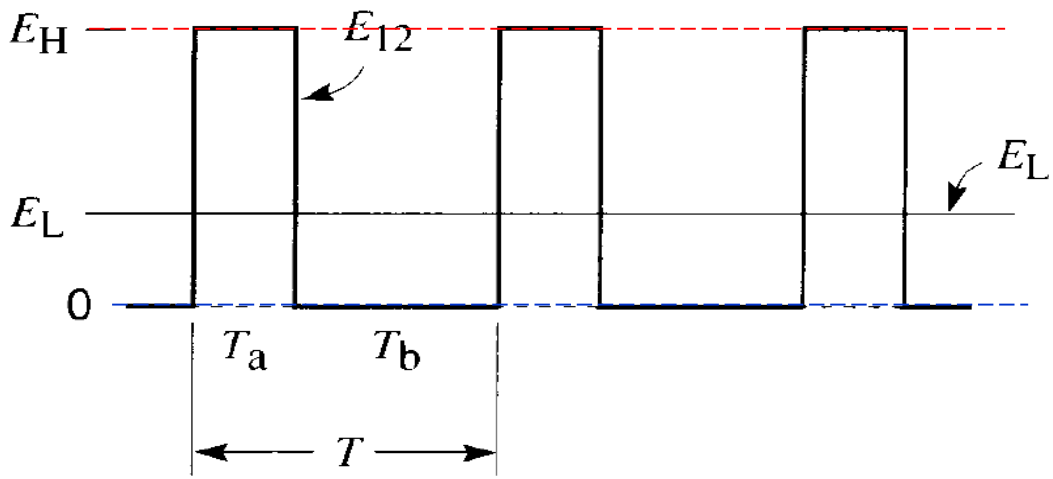

- Consider two mechanical switches S1 and S2 that open and close alternatively
  - Within the time of a cycle $T=T_a+T_b$, S1 is closed for T_a and S2 is closed for T_b
  - S1 has duty cycle $D=T_a/T$ and S2 has duty cycle $T_b/T=(1-D)$
  - Output voltage E_{12} fluctuates between E_H and 0, having the average DC output

    $E_L=DE_H$ (variable by varying D)

- **2-quadrant converter:**
  - **Specific voltage polarity**: Terminal 1 is always (+) with respect to terminal 2
  - **Bidirectional current**: current and power can flow from E_H to E_L, or vice versa since current always circulate through either S1 or S2

- Assume the load to be a battery E_o with internal resistance R, and use inductor L as a buffer between the fluctuating E_{12} and constant E_o

  Average current $I_L=(E_L-E_o)/R$
- If average DC voltage $E_L=E_o$, then $I_L=0$ and no dc power exchange happens
- Step-down chopper (buck mode):
  - If $E_L>E_o$, power=$|E_L I_L|$ flows to E_o
- Step-up chopper (boost mode):
  - If $E_L<E_o$, power=$|E_L I_L|$ flows to E_H
- In reality, mechanical switches S1 and S2 are replaced by semi-conductor switches Q1 and Q2 each with a diode placed in antiparallel for bi-directional currents
- Q1 and Q2 cannot be closed at the same time to avoid a short-circuit across E_H; in each half cycle, they both open for a very brief **dead time** (zero current from E_H) for a safety margin

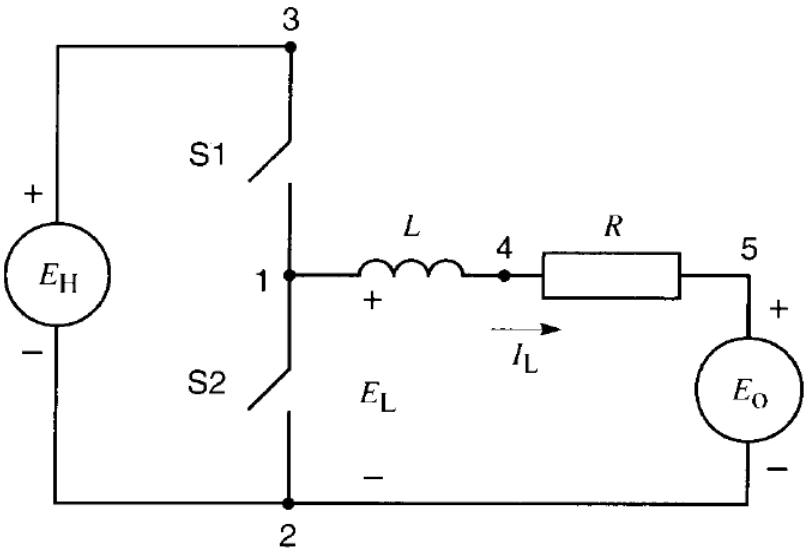

Figure 21.64
Power can flow from E_H to E_O and vice versa.

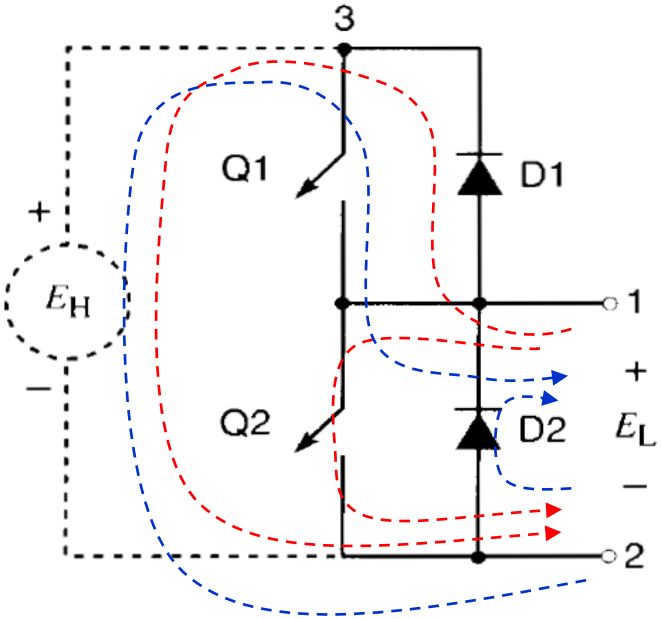

Figure 21.69
Two-quadrant electronic converter.

4-quadrant DC-to-DC converter

- It consists of two identical 2-quadrant converters having the same switching frequency, e.g. 100kHz
- **Switching rules:**
  - Q1 and Q2 on arm A open and close alternately
  - Q3 and Q4 on arm B open and close alternately
  - Q1 and Q4 open and close simultaneously (duty cycle *D*)
  - Q2 and Q3 open and close simultaneously (duty cycle 1-*D*)
- **4-quadrant:**
  - E_{LL} changes between $-E_H$ and $+E_H$
  - The DC current flow of the load connected between A and B can be from A to B or from B to A

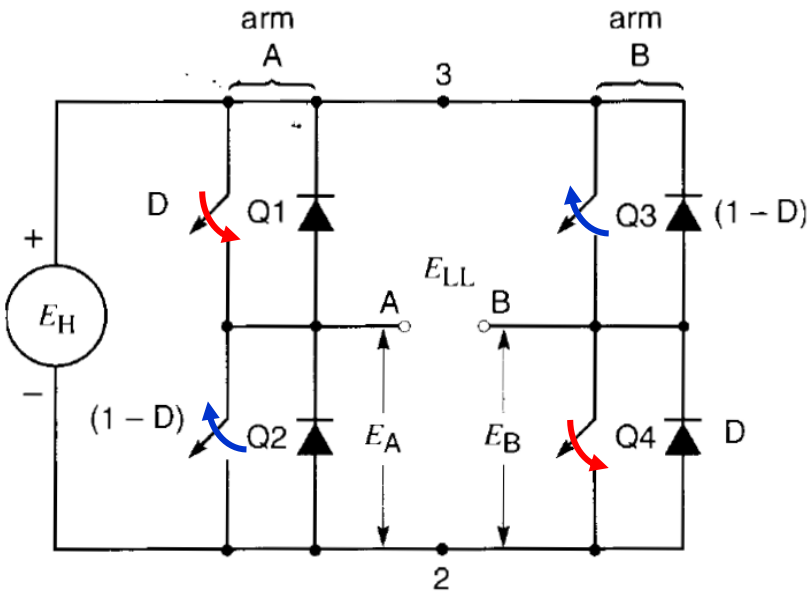

$$E_{A2}=DE_H$$

$$E_{B2}=(1-D)E_H$$

$$E_{LL}=E_{A2}-E_{B2}=(2D-1)E_H$$

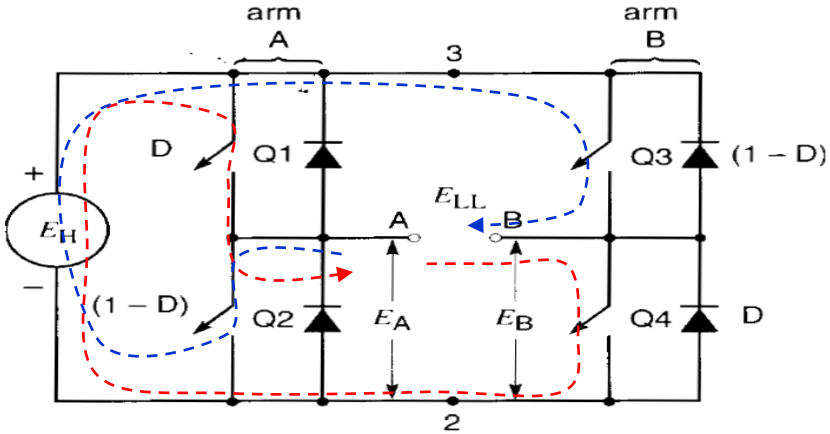

$$E_{LL}=E_{A2}-E_{B2}=(2D-1)E_H$$

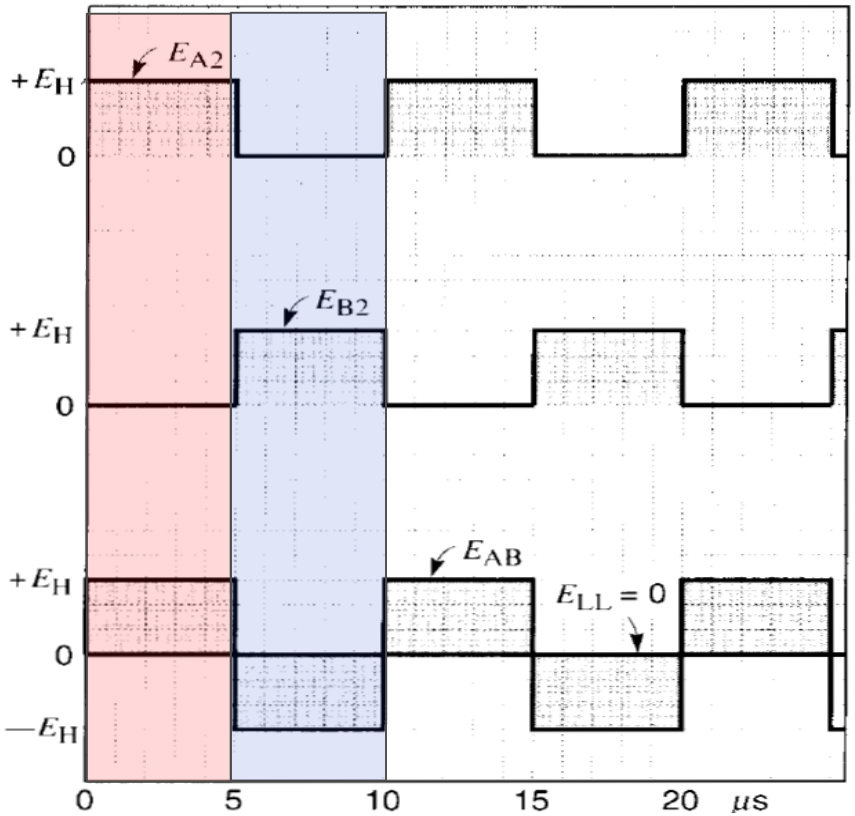

Figure 21.71
Voltage output when $D = 0.5$. The average voltage is zero.

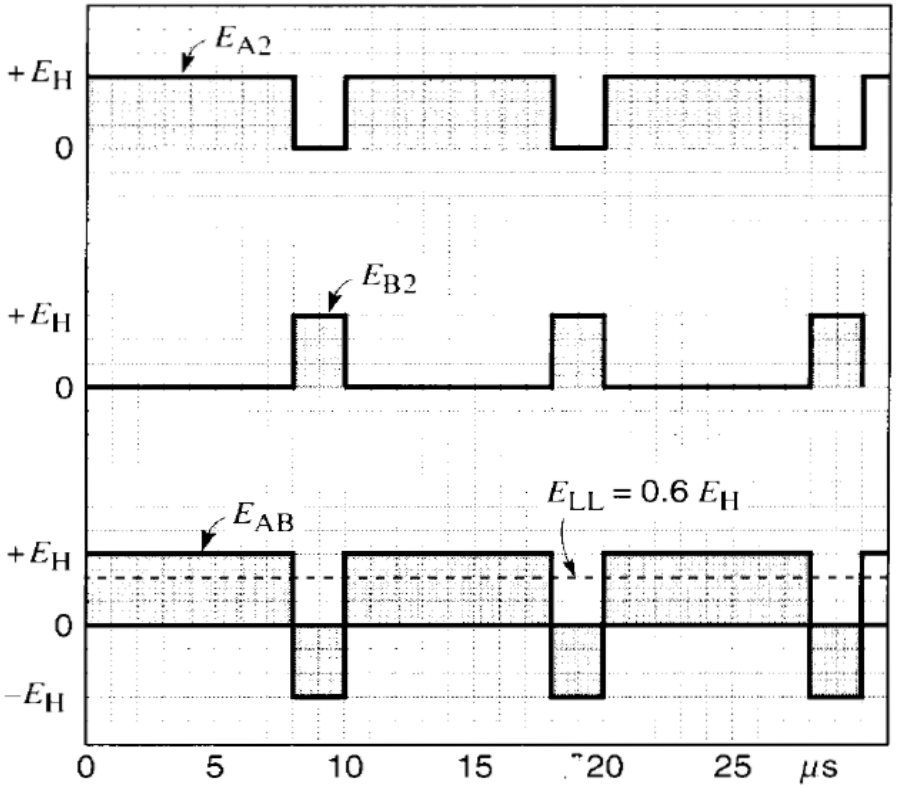

Figure 21.72
Voltage output when $D = 0.8$. The average voltage E_{LL} is 0.6 E_H.

Output voltage ripple filter

- A LC low-pass filter is applied to create almost flat DC output voltage E_o
- $f_{LC} << f = 1/T$

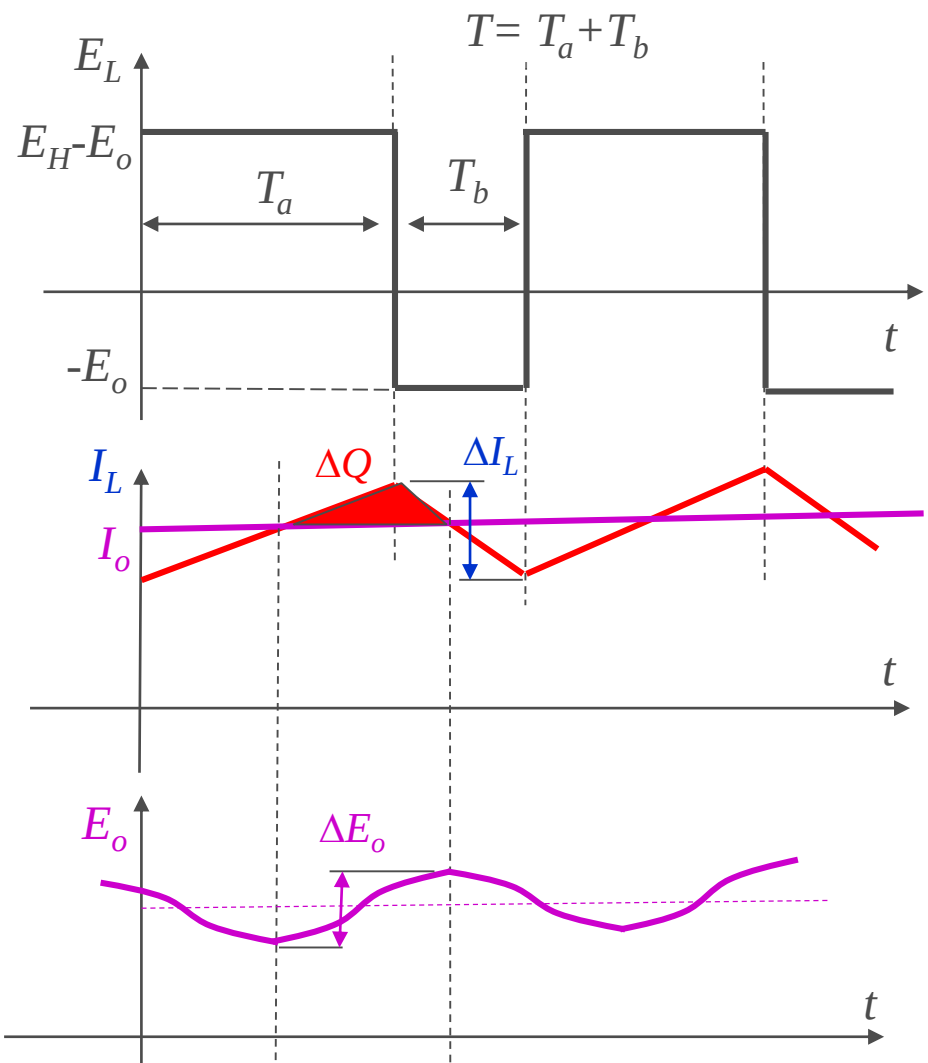

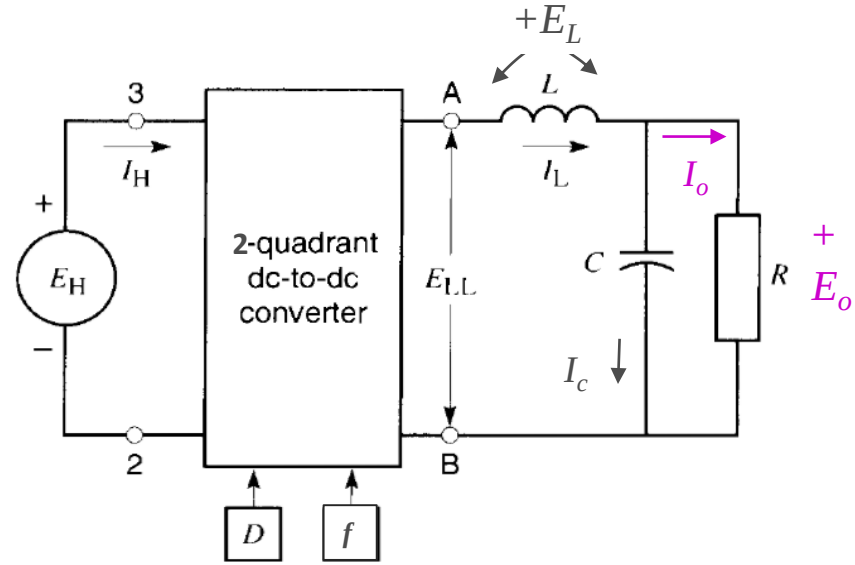

Figure 21.73
Four-quadrant dc-to-dc converter feeding a passive dc load *R*.

$$f_{LC} = \frac{1}{2\pi\sqrt{LC}}$$

$$\Delta I_L = \frac{E_o}{L} T_b = \frac{E_o}{L}(1-D)T$$

$$\Delta Q = C\Delta E_o = \int I_c dt = \frac{1}{2}\frac{\Delta I_L}{2}\frac{T}{2} = \frac{\Delta I_L T}{8} = \frac{E_o}{8L}(1-D)T^2$$

$$\frac{\Delta E_o}{E_o} = \frac{(1-D)T^2}{8LC} = \frac{\pi^2(1-D)}{2}\left(\frac{f_{LC}}{f}\right)^2 \approx 0$$

Examples 21-11, 21-12, 21-13

DC-to-AC rectangular wave converter

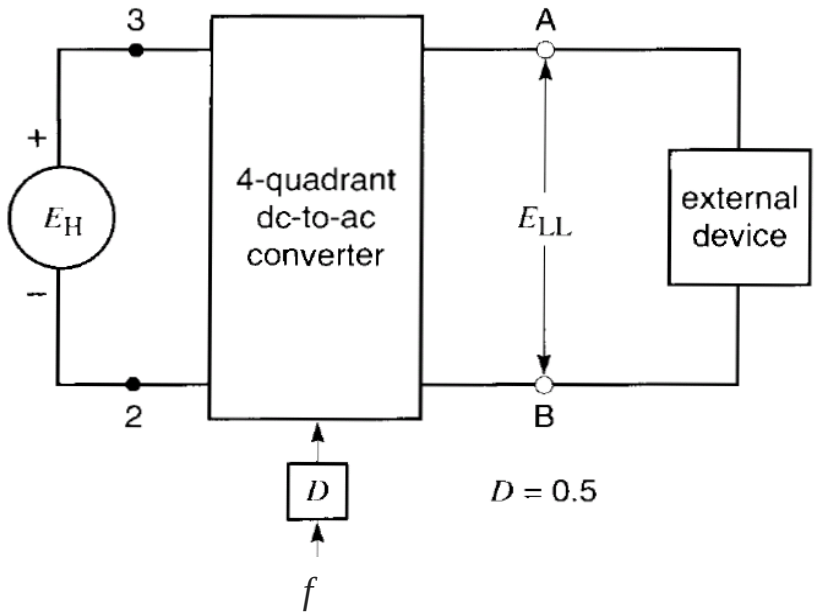

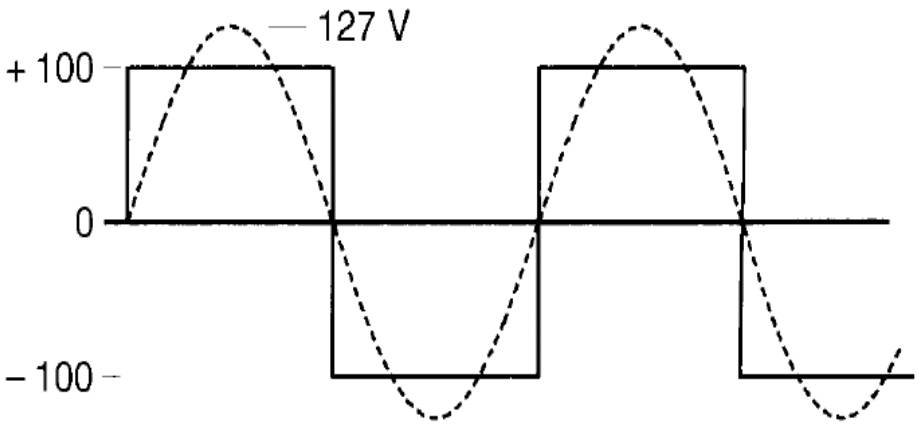

- The 4-quadrant converter with D=0.5 is able to transform a DC voltage E_H into a rectangular AC voltage $\pm E_H$, which contains a fundamental sinusoidal component having an amplitude of $1.27E_H$ and an effective value of $1.27E_H/\sqrt{2}=0.90E_H$
- It is bidirectional (DC-to-AC and AC-to-DC) and frequency-variable
- The output has a fixed amplitude and large 3rd, 5th and 7th harmonics.

DC-to-AC converter with PWM (pulse width modulation)

- 4-quadrant DC-to-DC converter using a carrier frequency f_c and different values of D

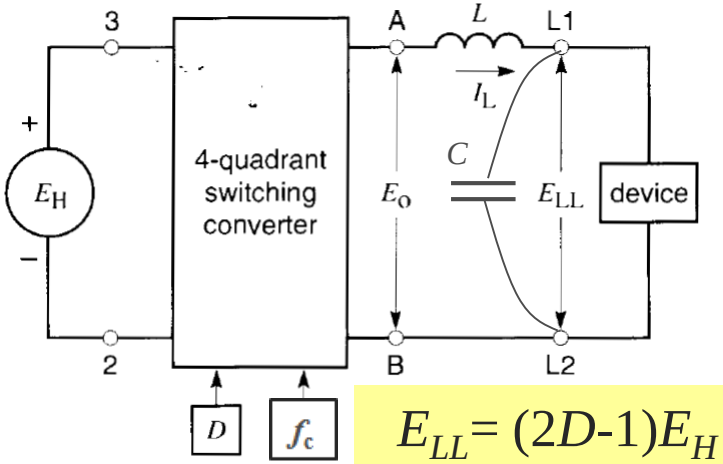

(a)

$$E_{LL} = (2D-1)E_H$$

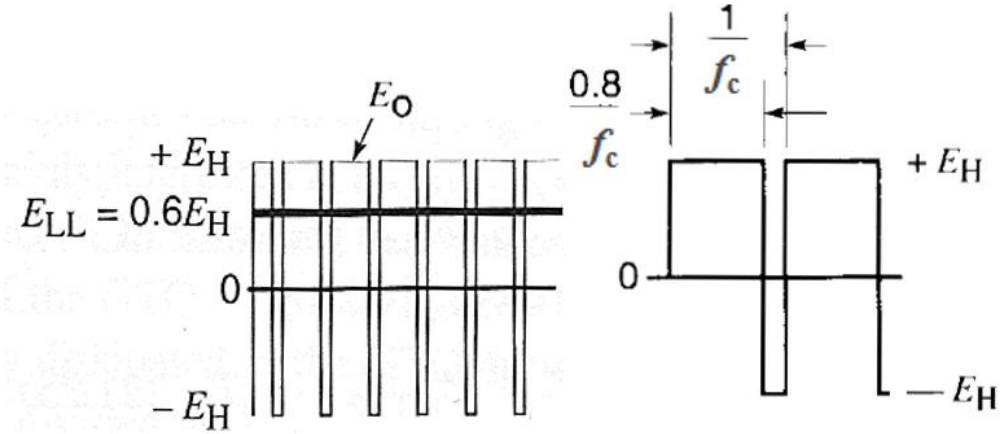

(b) $D = 0.8$ $E_{LL} = +0.6\ E_H$

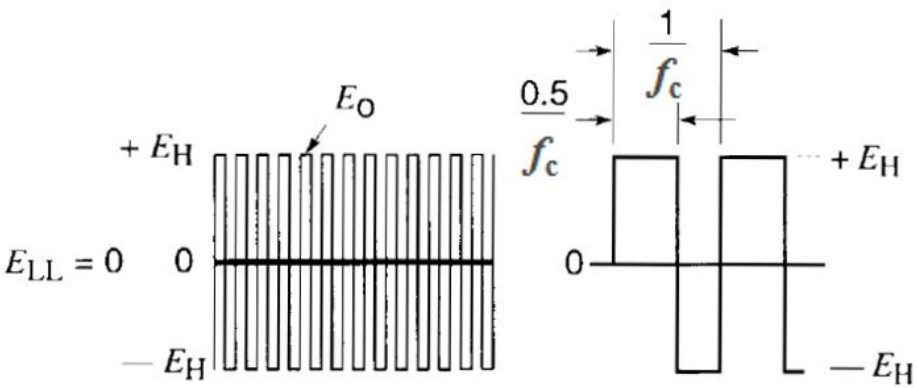

(c) $D = 0.5$ $E_{LL} = 0$

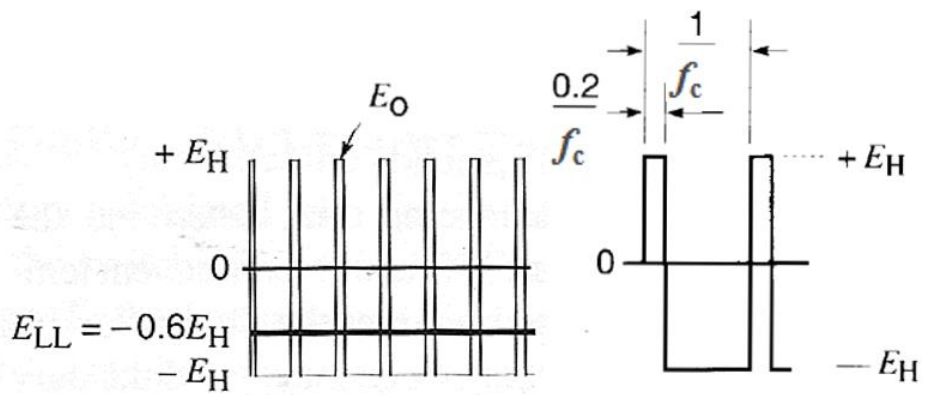

(d) $D = 0.2$ $E_{LL} = -0.6\ E_H$

- To obtain $E_{LL}(t)=E_m\sin(2\pi ft+\theta)$,

$$D(t) = \frac{E_m}{2E_H}\sin(2\pi ft+\theta) + \frac{1}{2}$$

Two DC-to-AC non-sine wave converters with PWM

- With D varying periodically between 0.8 and 0.2 at a frequency $f < 0.1 f_c$
- Although f_c is fixed, the ON/OFF pulse widths change continually with D.
- That is why this type of switching is called *pulse width modulation* or PWM

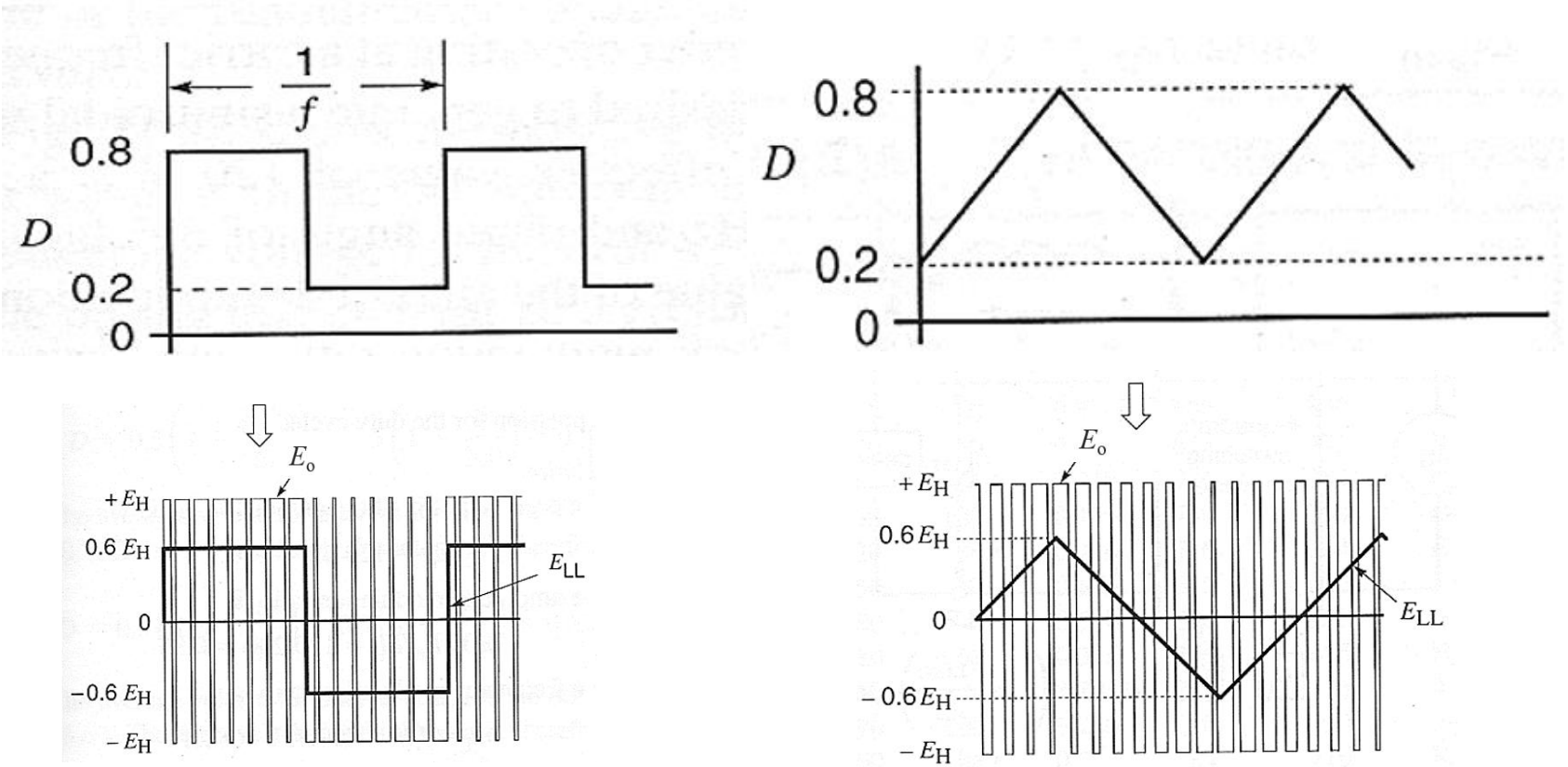

DC-to-AC sine wave converter with PMW

- To obtain $E_{LL}(t)=E_m\sin(2\pi ft+\theta)$

$$D(t)=\frac{E_m}{2E_H}\sin(2\pi ft+\theta)+\frac{1}{2}$$

Amplitude modulation ratio $m=E_m/E_H$

Frequency modulation ratio $m_f=f_c/f$

- Create a 83.33Hz sine voltage wave with a 100V peak value using a DC-to-AC converter with E_H=200V and f_c=1000Hz:

  T=1/83.33=0.012s=12000μs

  T_c=1/1000=1000μs

  T/T_c=12, so each T_c covers 360/12=30°

  Calculate D for $\phi(t)=2\pi ft+\theta$=0°, 30°, 60°, …, which correspond to E_{LL}=100sinϕ (V)

  In each carrier period T_c, Q1&Q4 are ON for first DT_c =1000D(μs) and then Q2&Q3 are ON for the remaining (1-D)T_c = 1000(1-D) (μs)

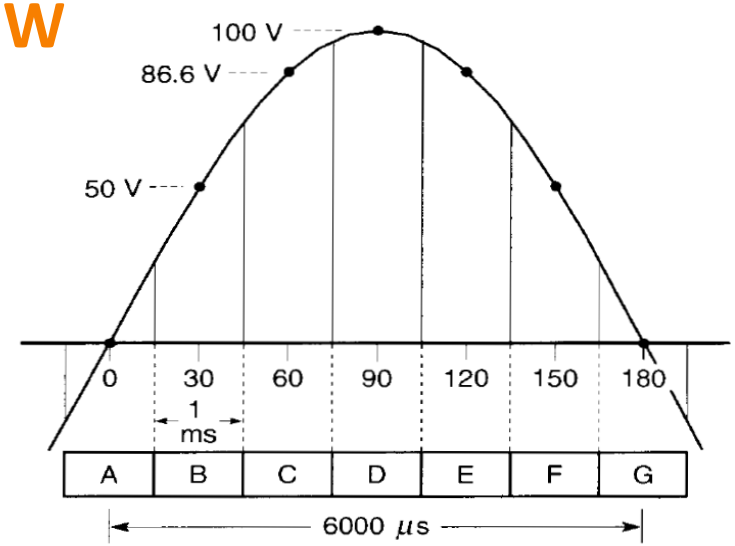

Figure 21.82
Positive half-cycle of the fundamental 83.33 Hz voltage comprises six carrier periods of 1 ms each.

TABLE 21E GENERATING A SINE WAVE

angle [deg]	E_{LL} [V]	D	Q1, Q4 on [μs]	Q2, Q3 on [μs]	interval
0	0	0.5	500	500	A
30	50	0.625	625	375	B
60	86.6	0.716	716	284	C
90	100	0.75	750	250	D
120	86.6	0.716	716	284	E
150	50	0.625	625	375	F
180	0	0.5	500	500	G
210	−50	0.375	375	625	H
240	−86.6	0.284	284	716	I
270	−100	0.250	250	750	J
300	−86.6	0.284	284	716	K
330	−50	0.375	375	625	L
360	0	0.5	500	500	M

Bipolar PWM and Unipolar PWM

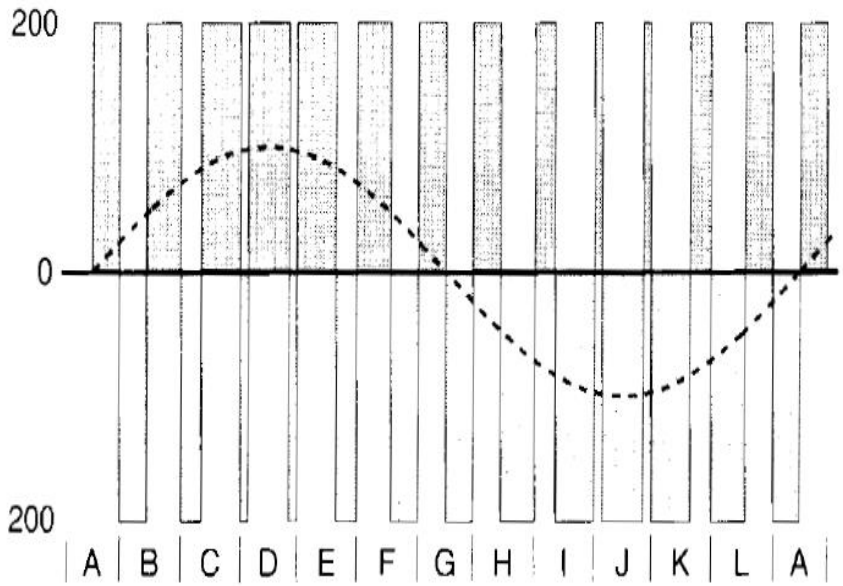

Figure 21.83
Alternative (+) and (−) pulses contain the sinusoidal component.

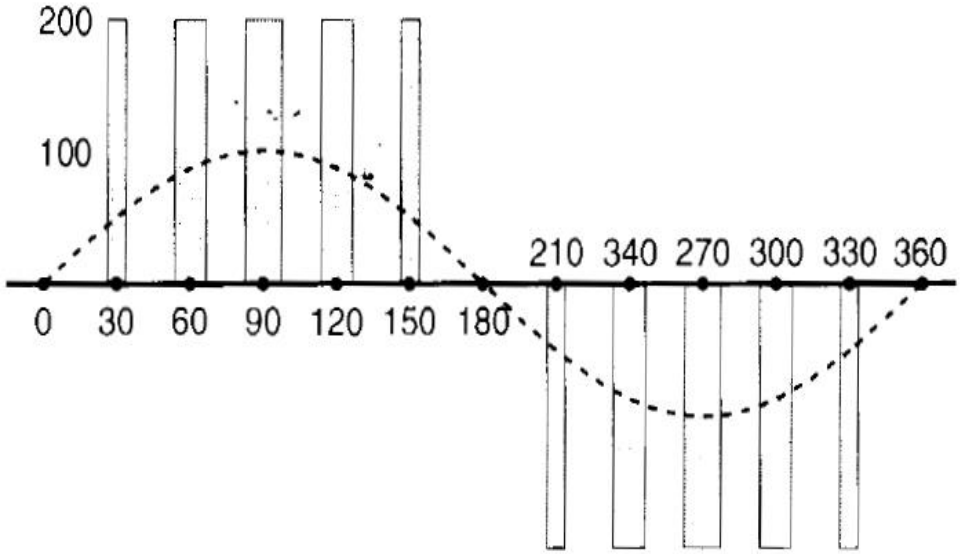

Figure 21.84
Sequential (+) and (−) pulses contain the sinusoidal components.

- Once the carrier frequency is filtered out, the resulting voltage will be sinusoidal
- A higher carrier frequency would yield a better sinusoidal waveform but would increase the power losses of the electronic switches, e.g. IGBTs

Creating the PMW pulse train

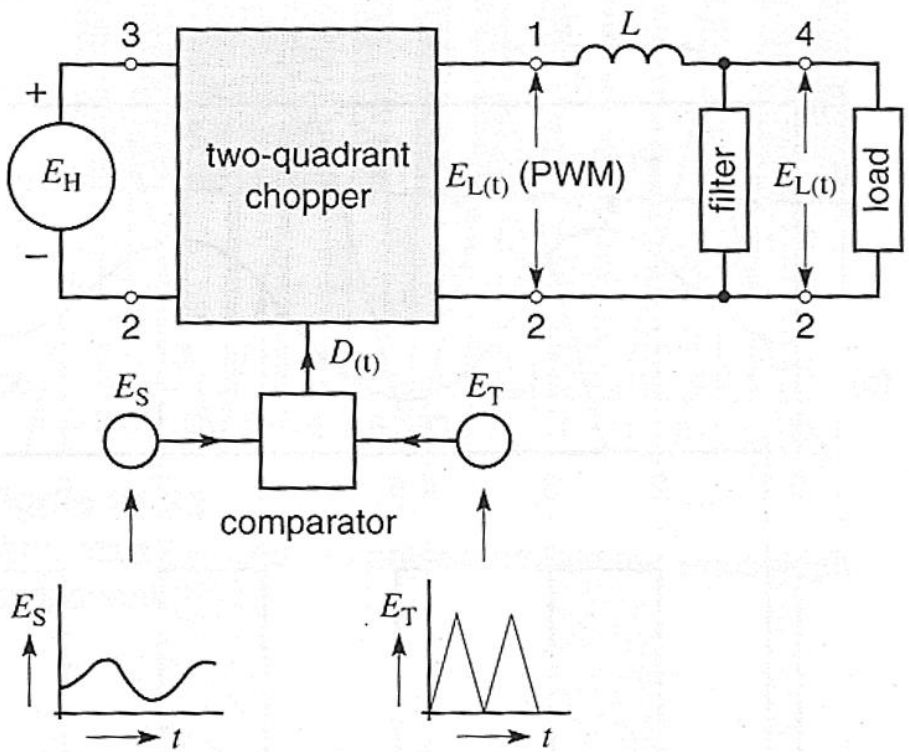

Figure 21.87
A comparator determines the crossing points between the miniature version E_S of the wanted waveshape $E_{L(t)}$ and a triangular waveshape, thereby producing the control signal $D_{(t)}$. The signal triggers the switches in the chopper to generate the PWM waveshape that contains the wanted output $E_{L(t)}$.

Switch Q1 is ON (Q2 is OFF) whenever E_L is above the triangular wave

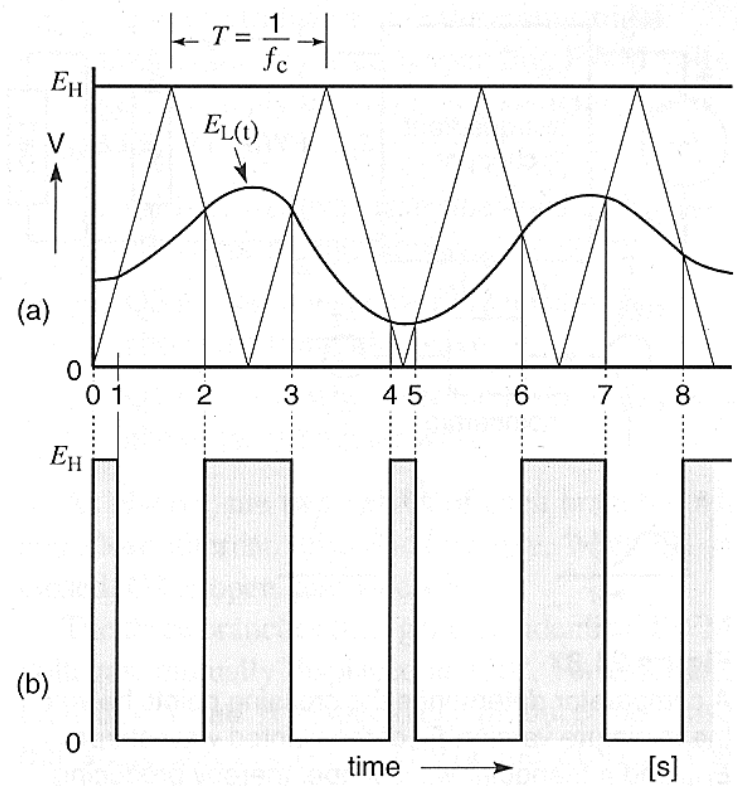

Figure 21.86
a. Transforming a desired voltage $E_{L(t)}$ into a series of PWM pulses using a two-quadrant chopper.
b. Pulse-width modulated form of the original $E_{L(t)}$ waveshape.

DC-to-AC 3-phase converter

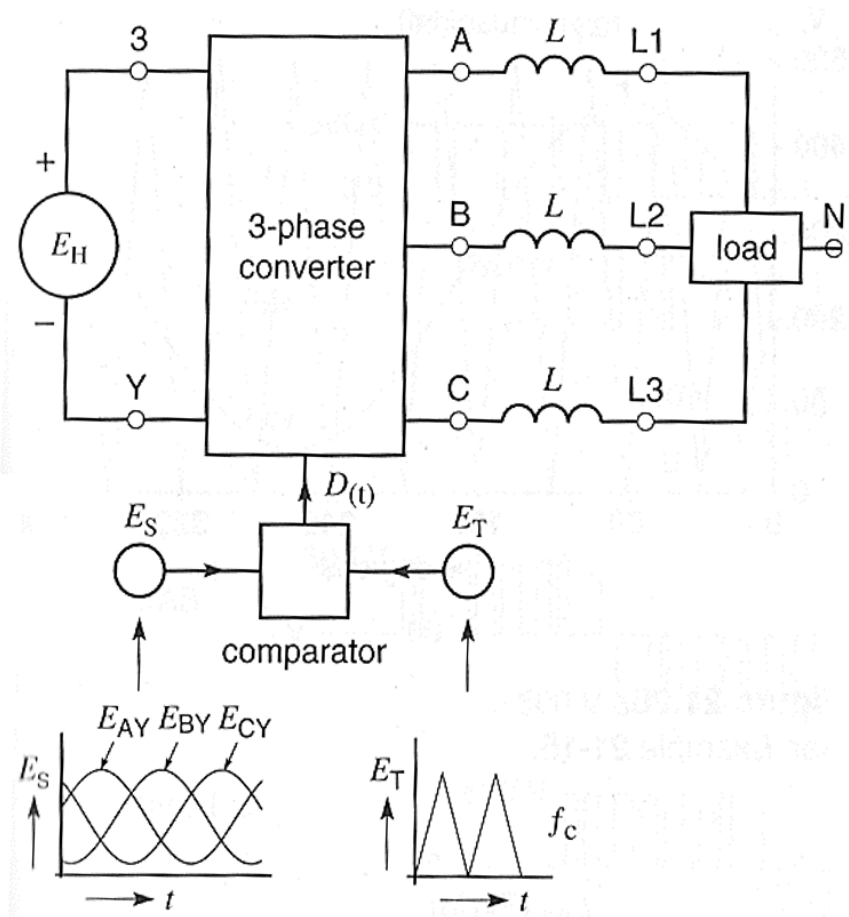

Figure 21.93
Block diagram of a 3-phase PWM converter.

- Switch Q1 is ON (Q2 is OFF) whenever E_{AY} is above the triangular wave
- Switch Q3 is ON (Q4 is OFF) whenever E_{BY} is above the triangular wave
- Switch Q5 is ON (Q6 is OFF) whenever E_{CY} is above the triangular wave

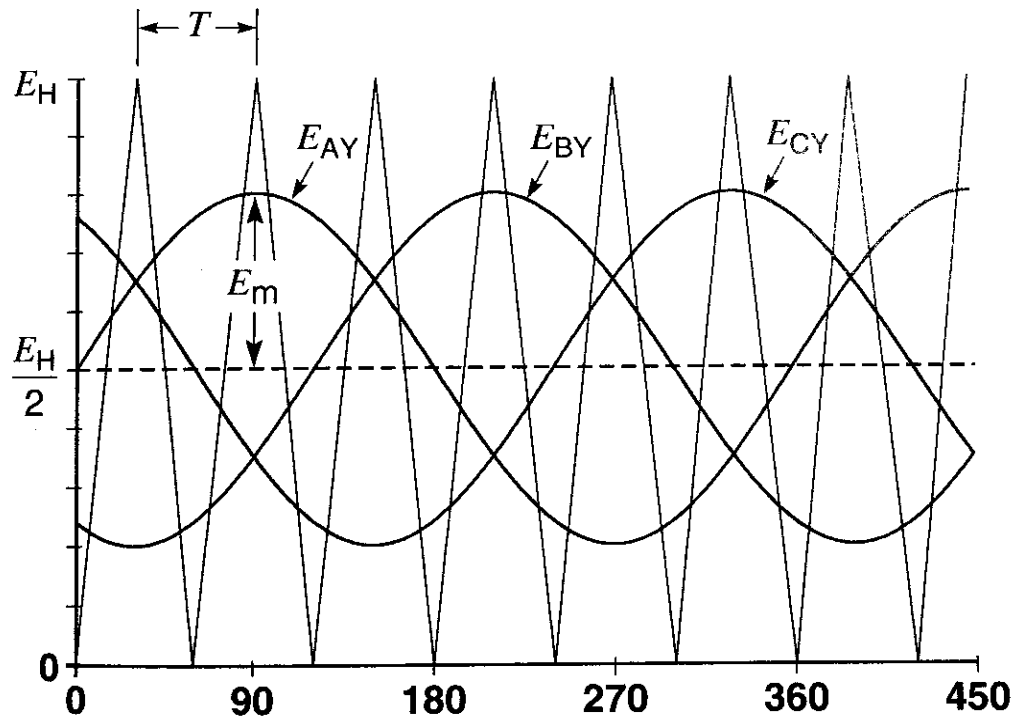

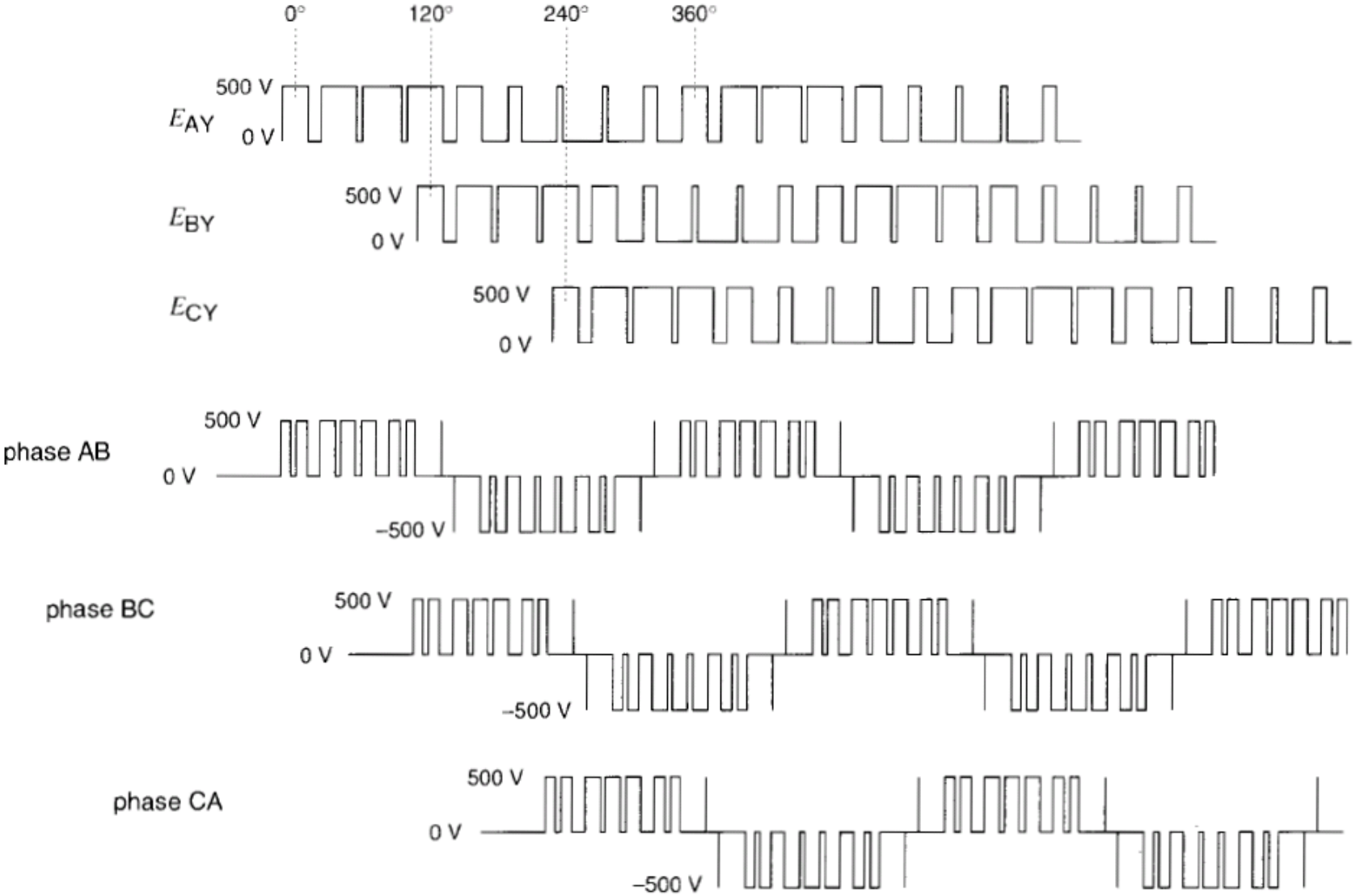

Figure 21.88
Three-phase PWM voltages produced by a dc-to-ac switching converter operating at 540 Hz with a 500 V dc input. Top: E_{AN}, E_{BN}, E_{CN} outputs, peak 60 Hz sinusoidal component = 200 V. Bottom: E_{AB}, E_{BC}, E_{CA} outputs, peak 60 Hz sinusoidal component = 346.4 V, rms value = 245 V.

3-phase, 6-pulse thyristor rectifier (AC-to-DC converter)

- Control the DC output voltage E_d by the delay angle α of triggering pulses

$$E_d = 1.35 E \cos\alpha$$

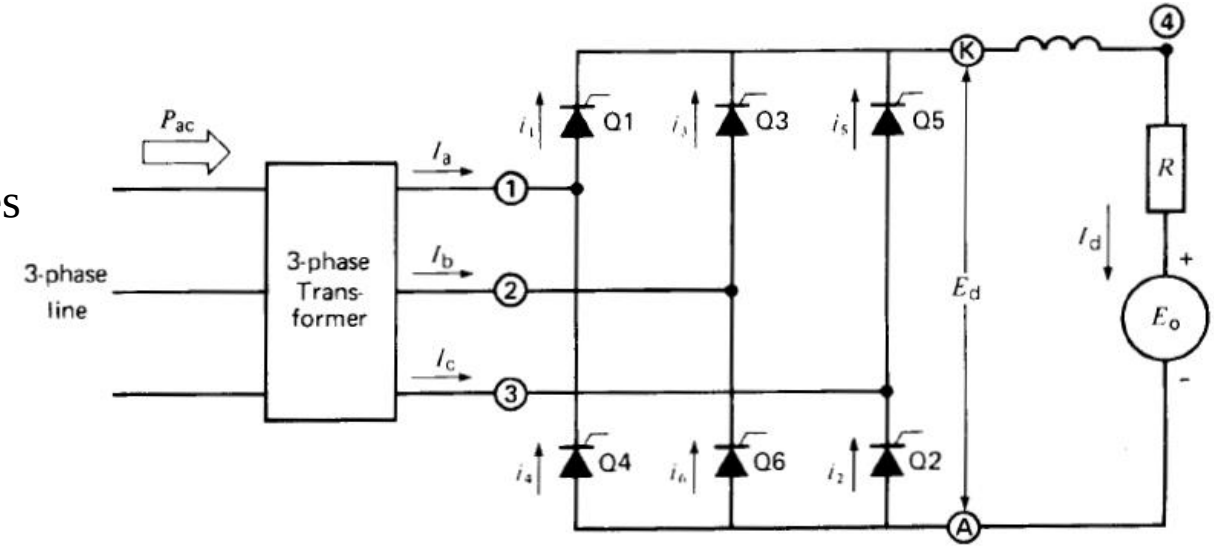

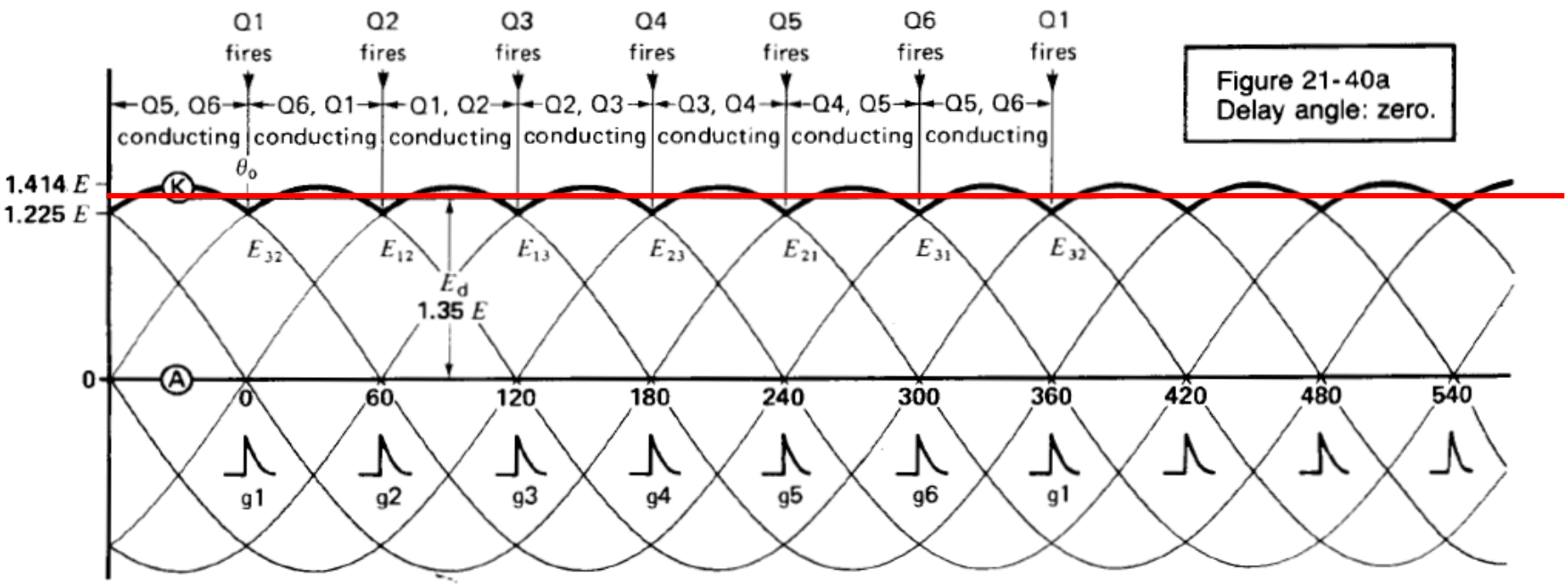

Figure 21-40a
Delay angle: zero.

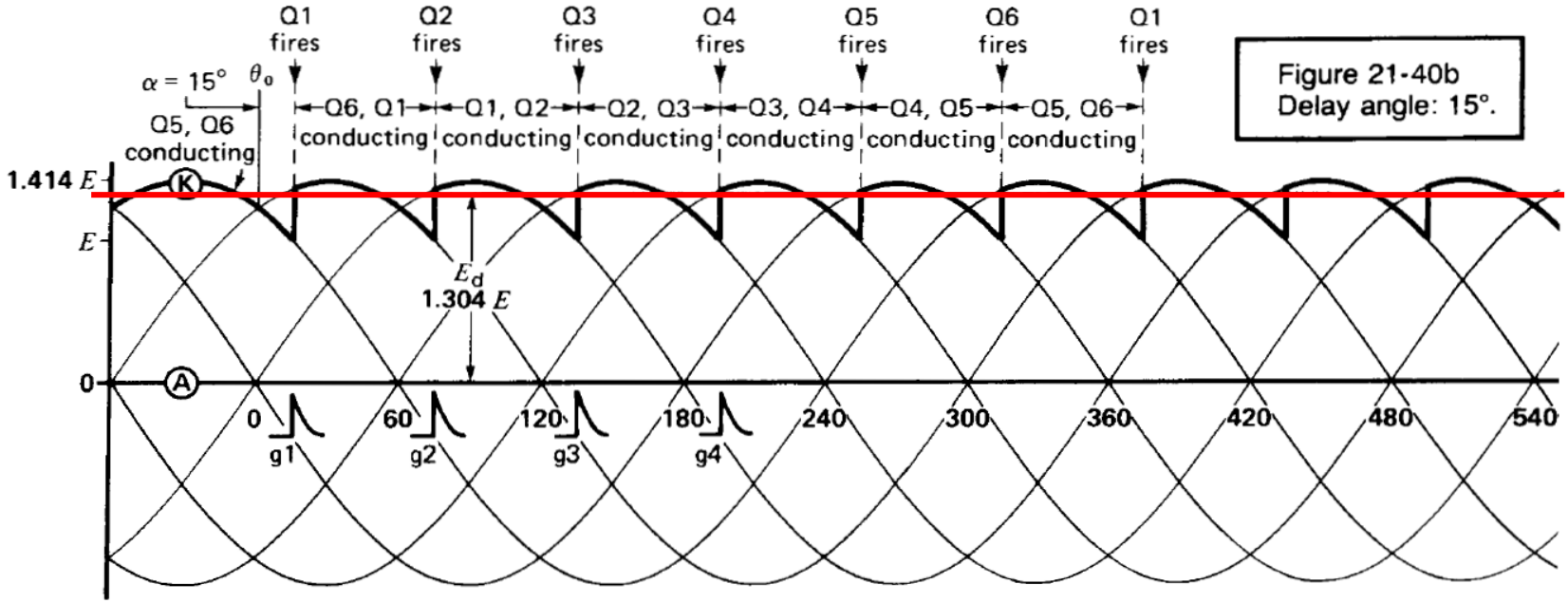

Figure 21-40b
Delay angle: 15°.

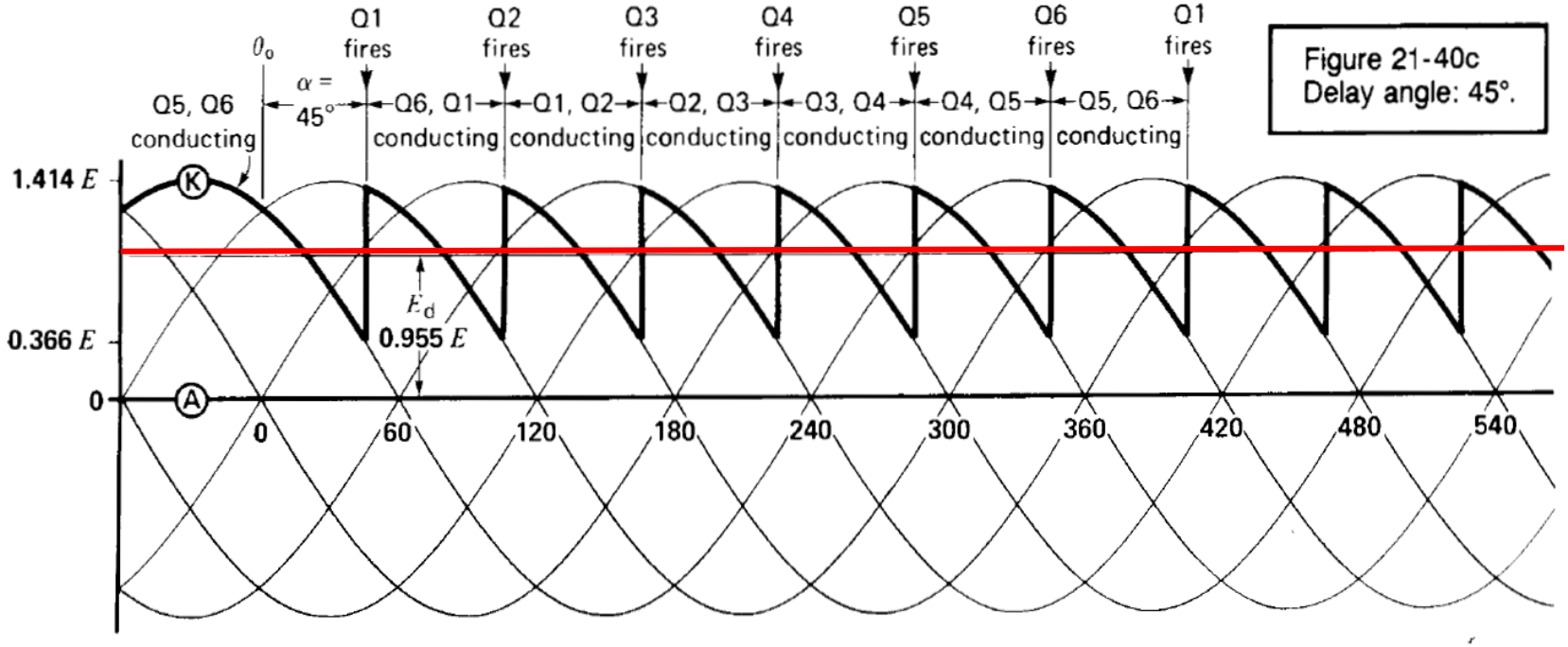

Figure 21-40c
Delay angle: 45°.

Homework Assignment #7

- Read Chapters 17 and 21
- Questions:
  - 17-13, 17-14, 17-15, 17-16, 17-19, 21-25, 21-26, 21-33, 21-34, 21-35
- Due date:
  - hand in your solution to Denis at MK 205 or by email (dosipov@vols.utk.edu) before the end of 11/30 (Monday)