Shifting Impedances (P→S)

$Z_p \rightarrow \boxed{1/a^2} \rightarrow Z_s$

$E_p \rightarrow \boxed{1/a} \rightarrow E_s$

$I_p \rightarrow \boxed{a} \rightarrow I_s$

1

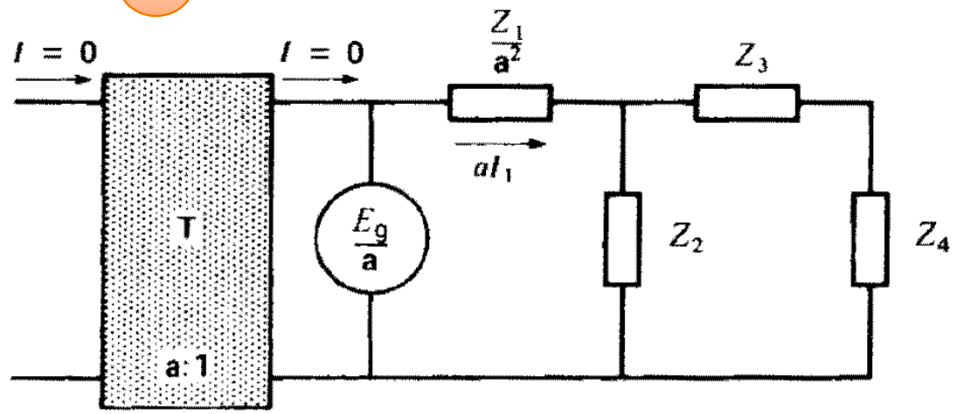

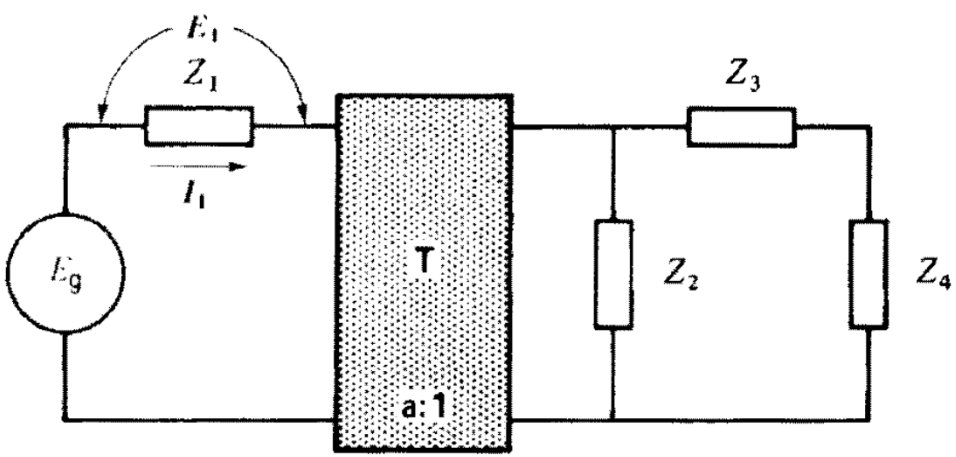

2

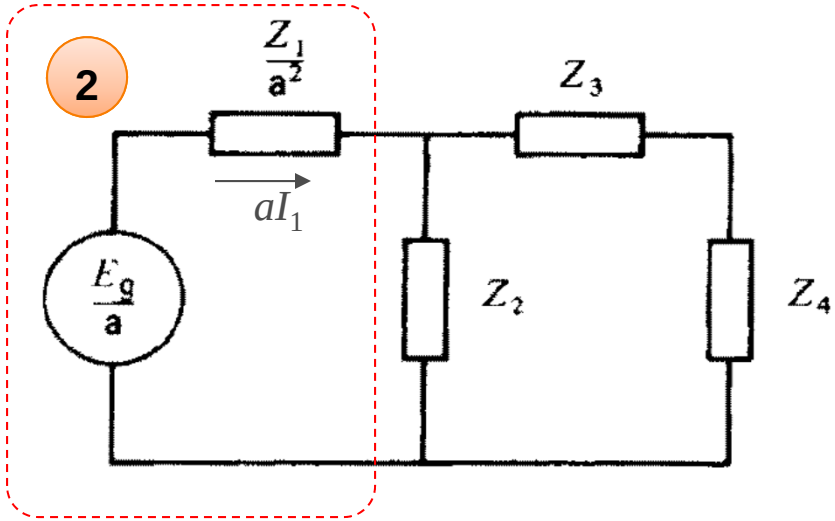

Examples 9-4&9-5

Considering an imperfect core

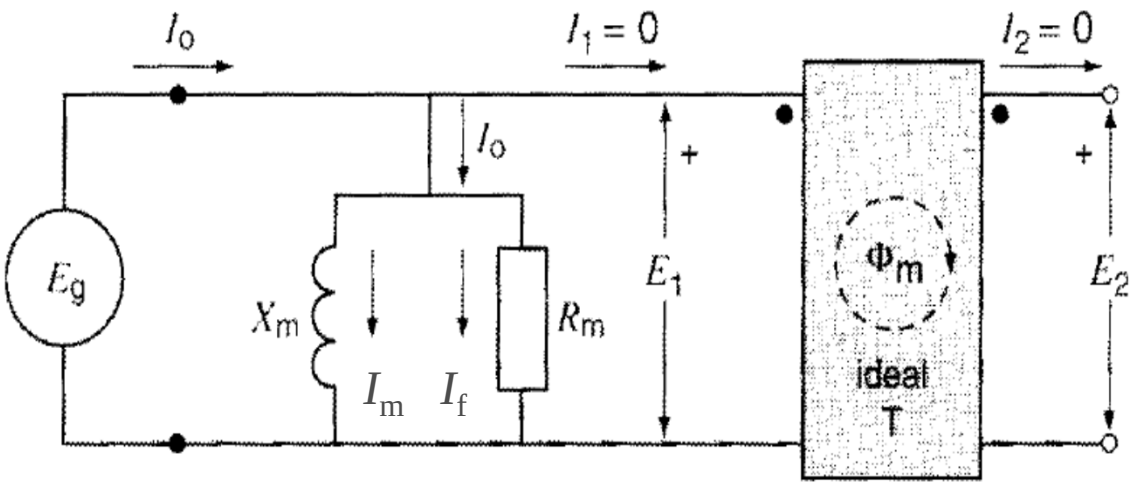

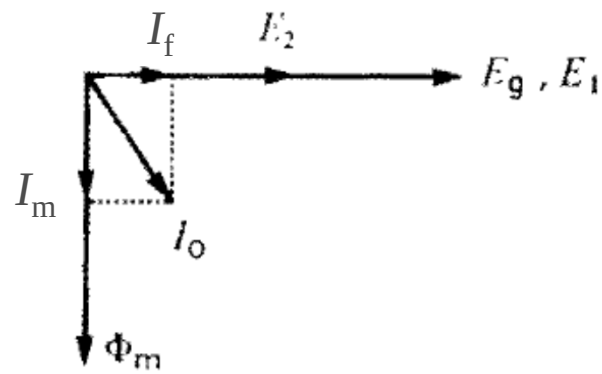

Under no-loading conditions: $I_1=I_2=0$

- P_m+jQ_m and I_o are the complex power and current outputs of source E_g. P_m is the iron loss (why?)
- R_m is a resistance causing the iron loss P_m and resulting heat

$$R_m=|E_1|^2/P_m \qquad I_f=E_1/R_m$$

- X_m is the magnetizing reactance that measures permeability of the core. A smaller X_m means lower permeability and needs a higher magnetizing current I_m (i.e. bigger reactive power $Q_m=|E_1|^2/X_m$) to set up mutual flux Φ_m

$$X_m=|E_1|^2/Q_m \qquad I_m=E_1/jX_m$$

Considering loose coupling and resistances of windings

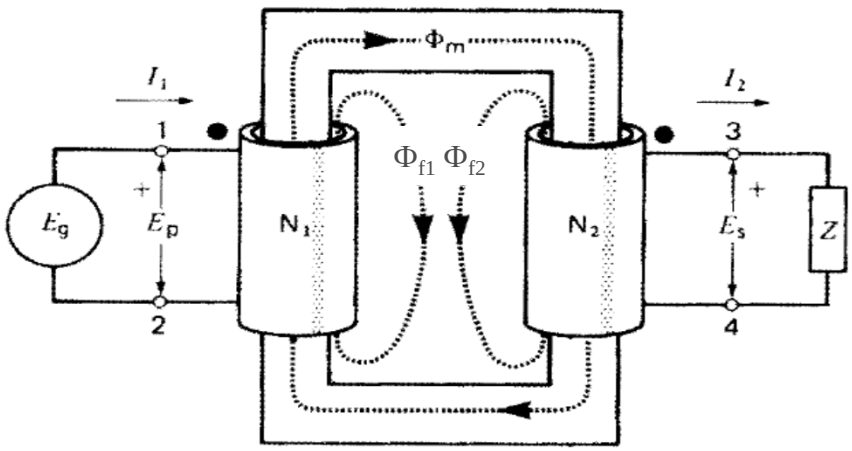

Figure 10.5
A transformer possesses two leakage fluxes and a mutual flux.

$E_1 = 4.44 f N_1 \Phi_m$ $\quad E_2 = 4.44 f N_2 \Phi_m$

$E_{f1} = 4.44 f N_1 \Phi_{f1}$ $\quad E_{f2} = 4.44 f N_2 \Phi_{f2}$

KVL: $E_1 + E_{f1} = E_p = E_g$ $\quad E_2 - E_{f2} = E_s$

- Treat E_{f1} and E_{f2} as voltage drops on two winding impedances (including winding resistance and leakage reactance)

$E_{f1} = (R_1 + jX_{f1})\, I_1$ $\quad E_{f2} = (R_2 + jX_{f2})\, I_2$

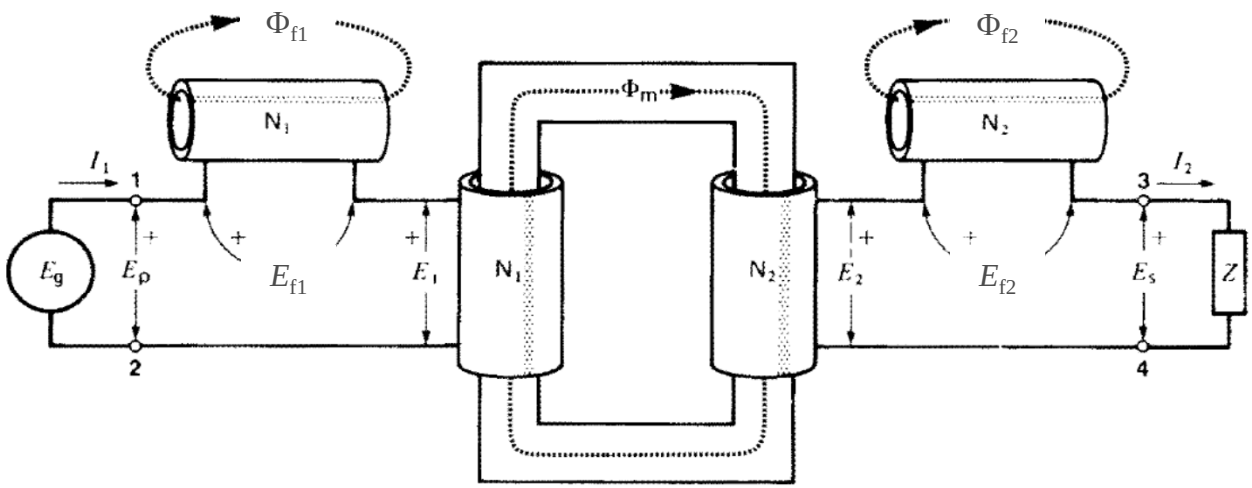

Figure 10.6
Separating the various induced voltages due to the mutual flux and the leakage fluxes.

Equivalent Circuit of a Practical Transformer

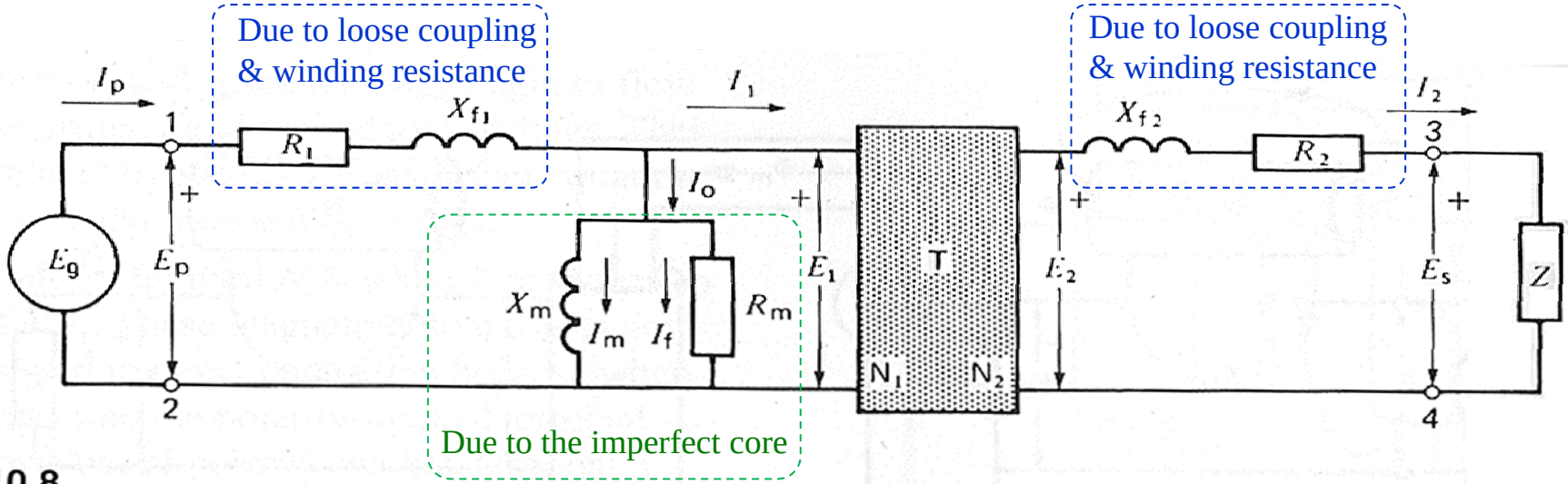

Figure 10.8
Complete equivalent circuit of a practical transformer. The shaded box T is an ideal transformer.

TABLE 10A ACTUAL TRANSFORMER VALUES

S_n	kVA	1	10	100	1000	400000
E_{np}	V	2400	2400	12470	69000	13800
E_{ns}	V	460	347	600	6900	424000
I_{np}	A	0.417	4.17	8.02	14.5	29000
I_{ns}	A	2.17	28.8	167	145	943
R_1	Ω	58.0	5.16	11.6	27.2	0.0003
R_2	Ω	1.9	0.095	0.024	0.25	0.354
X_{f1}	Ω	32	4.3	39	151	0.028
X_{f2}	Ω	1.16	0.09	0.09	1.5	27
X_m	Ω	200000	29000	150000	505000	460
R_m	Ω	400000	51000	220000	432000	317
I_o	A	0.0134	0.0952	0.101	0.210	52.9

No-load conditions

- $I_1=I_2=0$
- Ignore R_1, X_{f1}, R_2 and X_{f2}
- $E_p \approx E_1 = aE_2 = aE_s$

10%-100% load conditions

- $I_p >> I_o$,
- Ignore I_o

Simplified Equivalent Circuits

- No-load conditions (I_1=I_2=0)
  - Ignoring winding leakage fluxes and losses

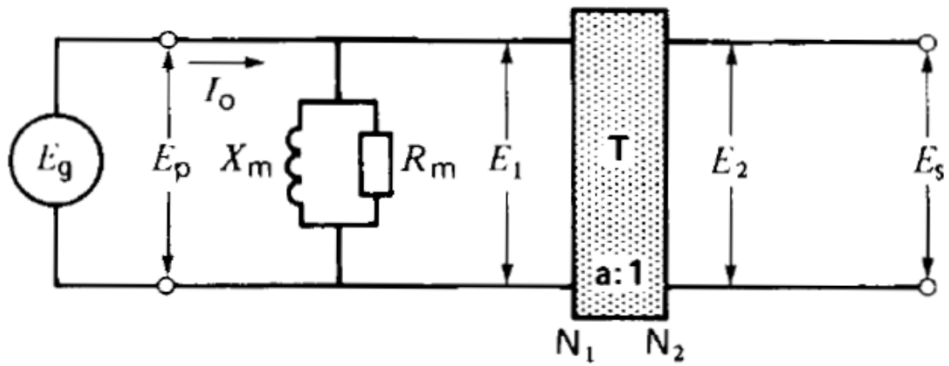

Figure 10.21
Simplified circuit at no-load.

- 10%-100% load conditions (Ignoring I_o)
  - Ignoring core reluctance and losses

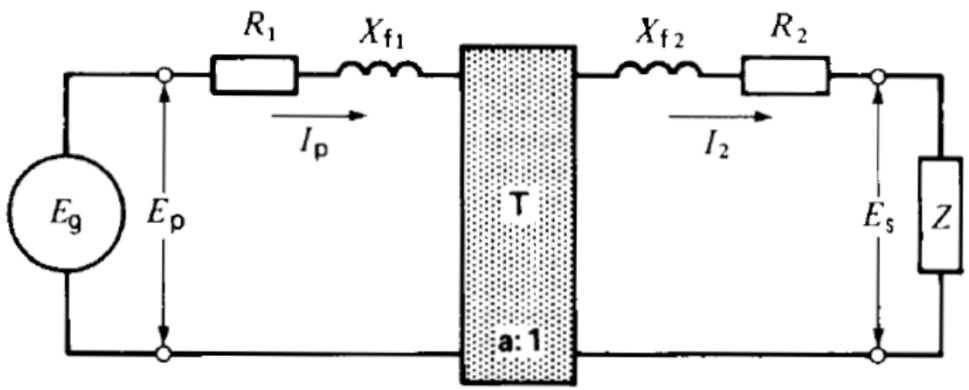

Figure 10.22
Simplified equivalent circuit of a transformer at full-load.

Equivalent Circuits Referred to One Side

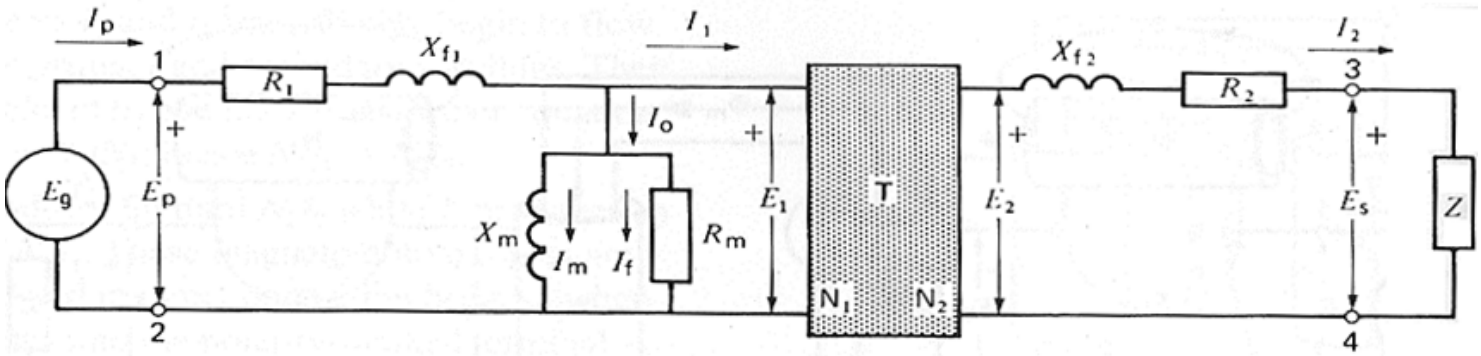

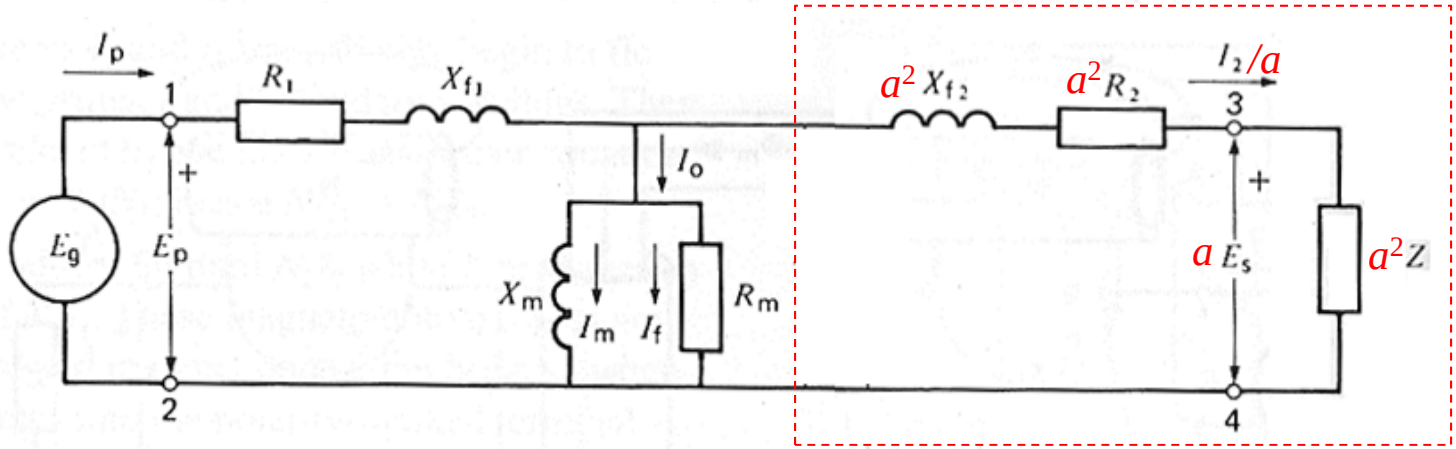

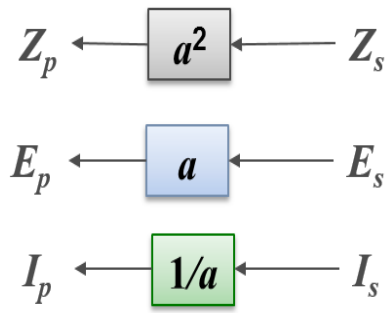

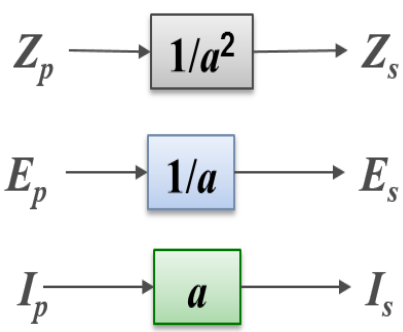

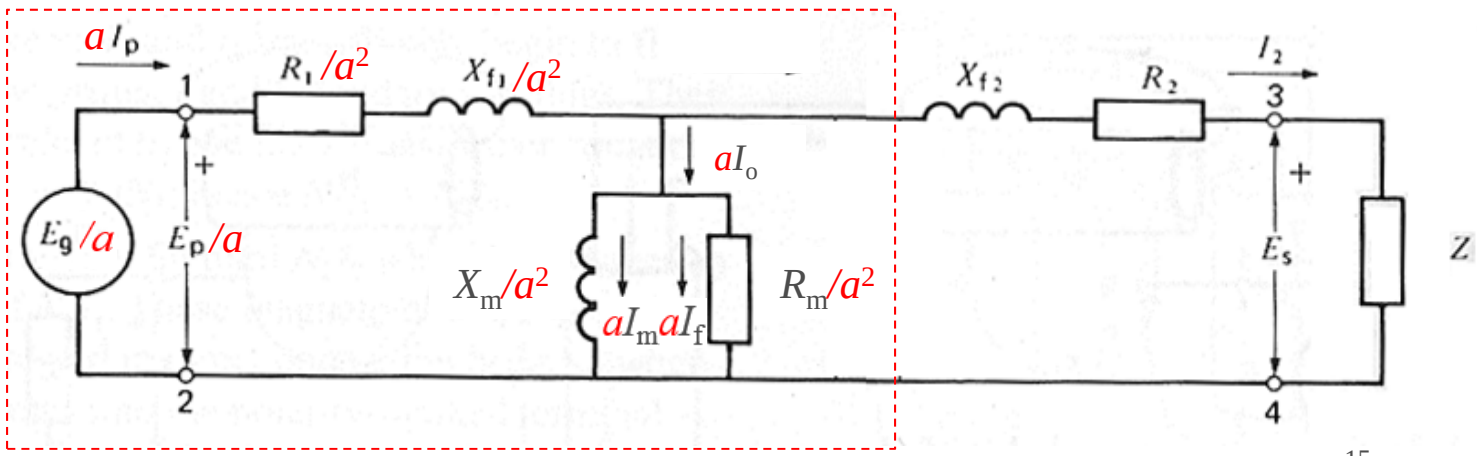

Simplified Equivalent Circuits Referred to One Side

- Under load conditions

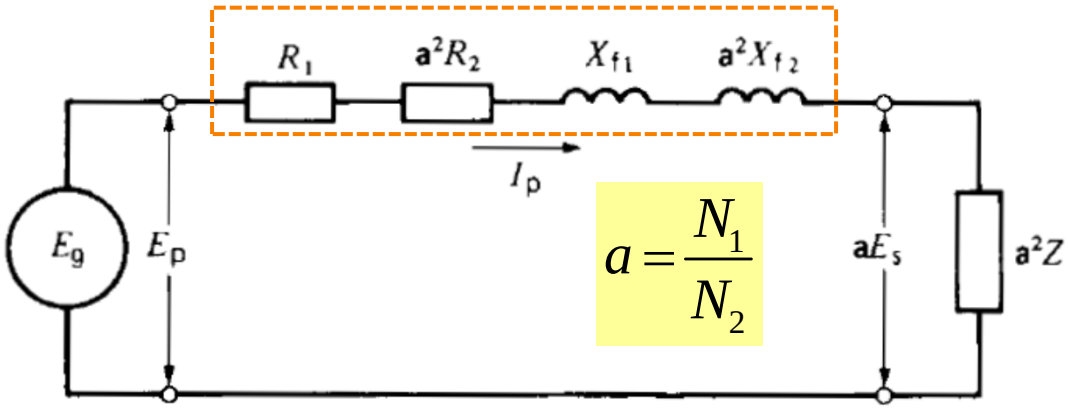

$$a = \frac{N_1}{N_2}$$

Figure 10.23
Equivalent circuit with impedances shifted to the primary side.

$$Z_p = R_p + j\,X_p$$
$$= R_1 + a^2R_2 + j(X_{f1} + a^2X_{f2})$$

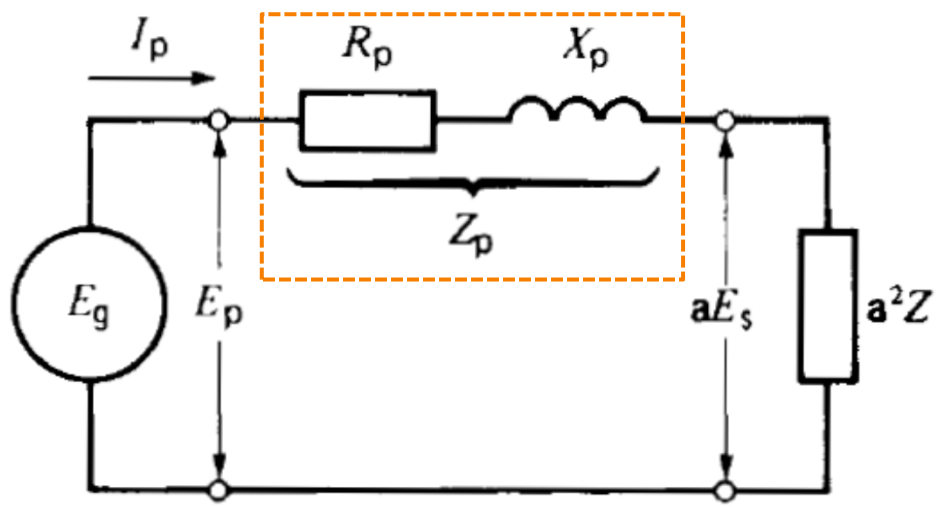

Voltage Regulation

- With the primary voltage held constant at its rated value, the voltage regulation is % change of the secondary voltage from no-load to full load (rated)

$$\text{Voltage Regulation} = \frac{|E_{NL}| - |E_{FL}|}{|E_{FL}|} \times 100$$

E_{NL}: secondary voltage at no-load

E_{FL}: secondary voltage at full-load

- The voltage regulation depends on the power factor of the load on the secondary side
  - If the load is capacitive, the full-load voltage may exceed the no-load voltage, in which case the voltage regulation becomes negative

Measuring Transformer Impedances

- **Open-circuit (no-load) test**
  - Neglect R_1, X_{f1}, R_2, X_{f2}
  - Measure P_m (core loss), $|E_p|$, $|I_o|$ and $|E_s|$

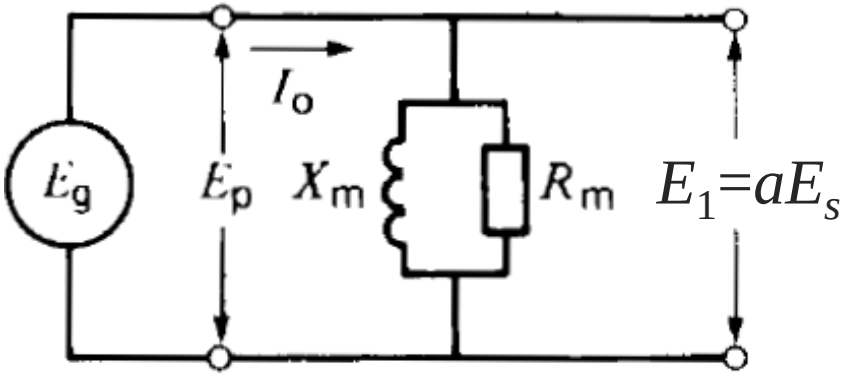

$$R_m = \frac{|E_p|^2}{P_m} \qquad |I_f| = \frac{|E_p|}{R_m}$$

$$|I_m| = \sqrt{|I_o|^2 - |I_f|^2}$$

$$X_m = \frac{|E_p|}{|I_m|}$$

$$a = \frac{N_1}{N_2} = \frac{|E_p|}{|E_s|}$$

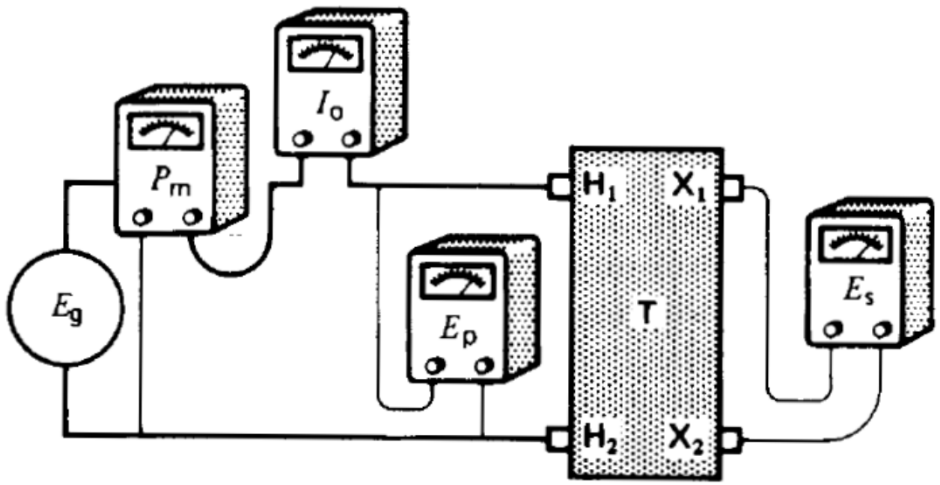

Figure 10.27
Open-circuit test and determination of R_m, X_m, and turns ratio.

- **Short-circuit test**
  - Apply a low voltage E_{SC} to the primary side to create I_{SC} less than the nominal value to prevent overheating and rapid change in winding resistance
  - Neglect R_m and X_m due to low core flux

$$|Z_p| = \frac{|E_{sc}|}{|I_{sc}|}$$

$$R_p = \frac{P_{sc}}{|I_{sc}|^2}$$

$$X_p = \sqrt{|Z_p|^2 - R_p^2}$$

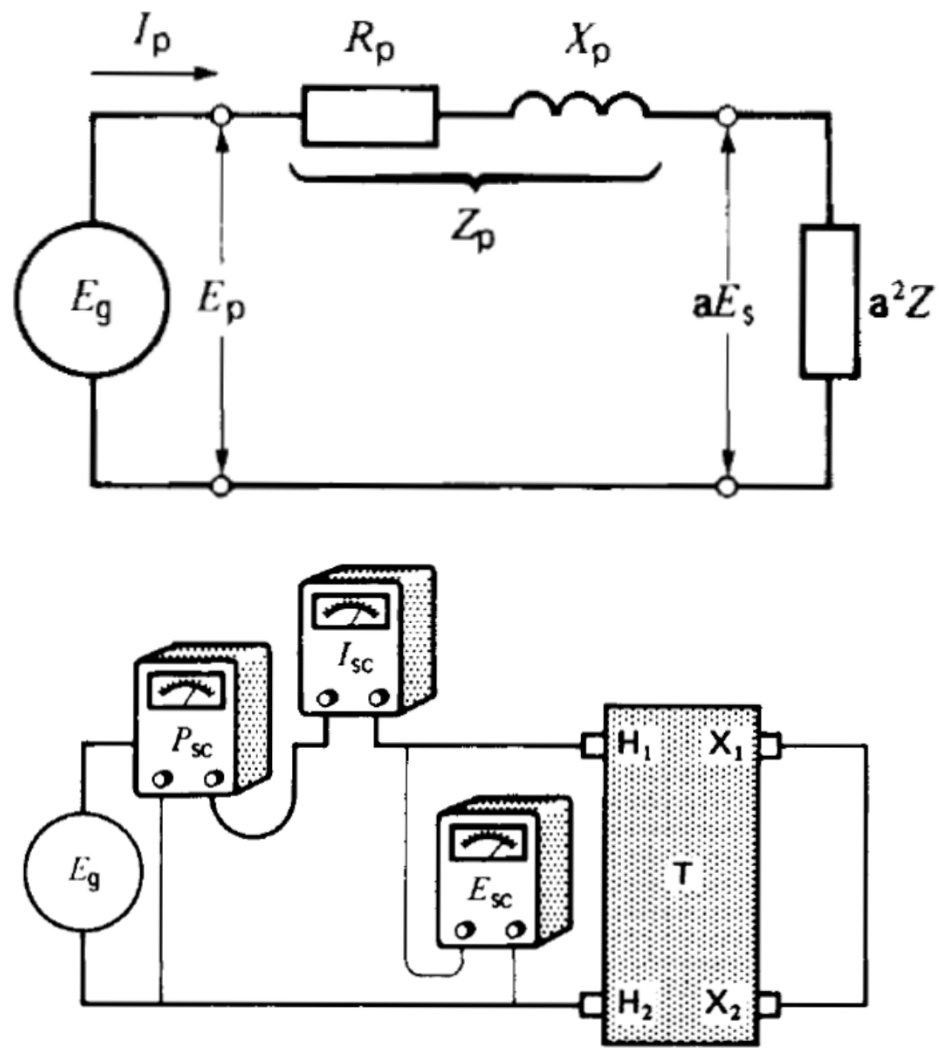

Figure 10.28
Short-circuit test to determine leakage reactance and winding resistance.

Construction of a power transformer

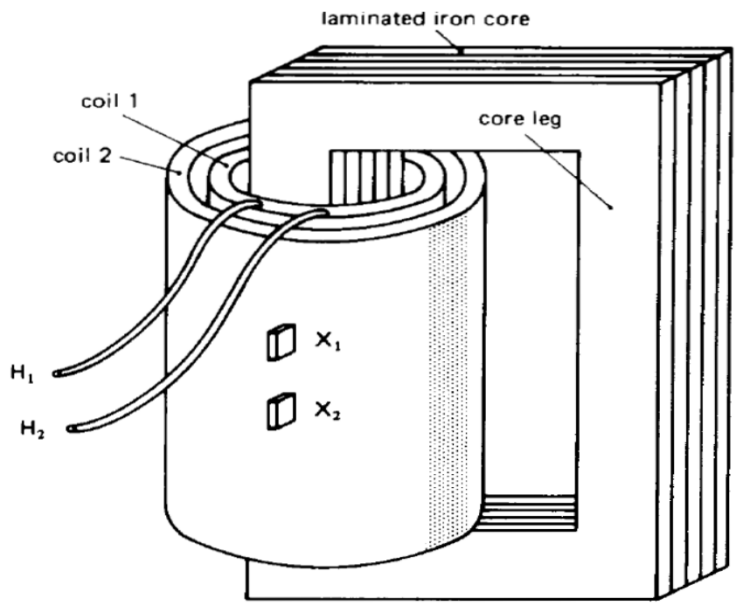

Figure 10.9a
Construction of a simple transformer.

- Core: made of iron for high permeability; laminated and high resistive to reduce iron losses
- Windings: the primary and secondary coils are wound closely on top of each other with careful insulation for tight coupling; the HV winding has more turns but uses a smaller size of conductor, so copper/aluminum of two windings are about the same

Standard terminal markings and polarity tests

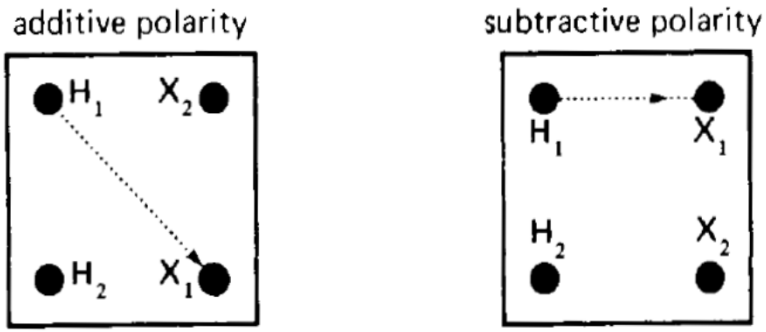

Figure 10.10
Additive and subtractive polarity depend upon the location of the H_1-X_1 terminals.

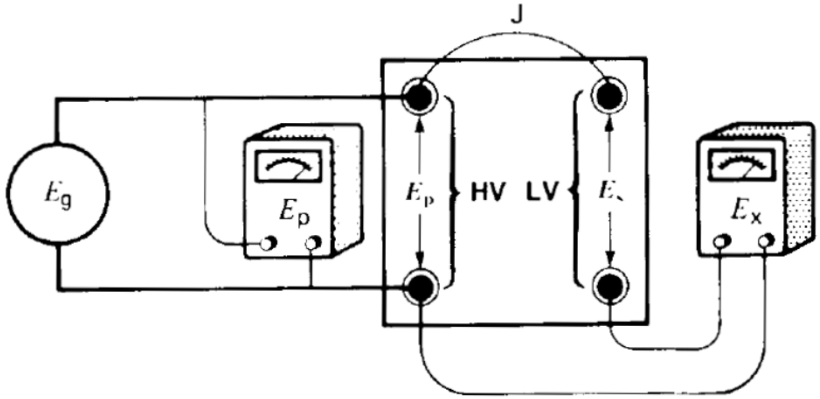

Figure 10.11
Determining the polarity of a transformer using an ac source.

- High-Voltage winding (H_1&H_2) and Low-Voltage winding (X_1& X_2)

  $E_{H1,H2}/E_{X1,X2}=E_H/E_X=N_H/N_X$
- Polarity test:
  1. Connect HV winding to a low voltage source E_g
  2. Connect a jumper J between any two adjacent HV and LV terminals
  3. Connect two voltmeters to as shown in Figure 10.11
  4. The polarity is additive if $|E_x|>|E_p|$ or, otherwise, is subtractive.

The Per-Unit System

- Quantity in **Per-Unit** = **Actual** quantity / **Base or nominal** value of quantity
- Why per-unit notations?

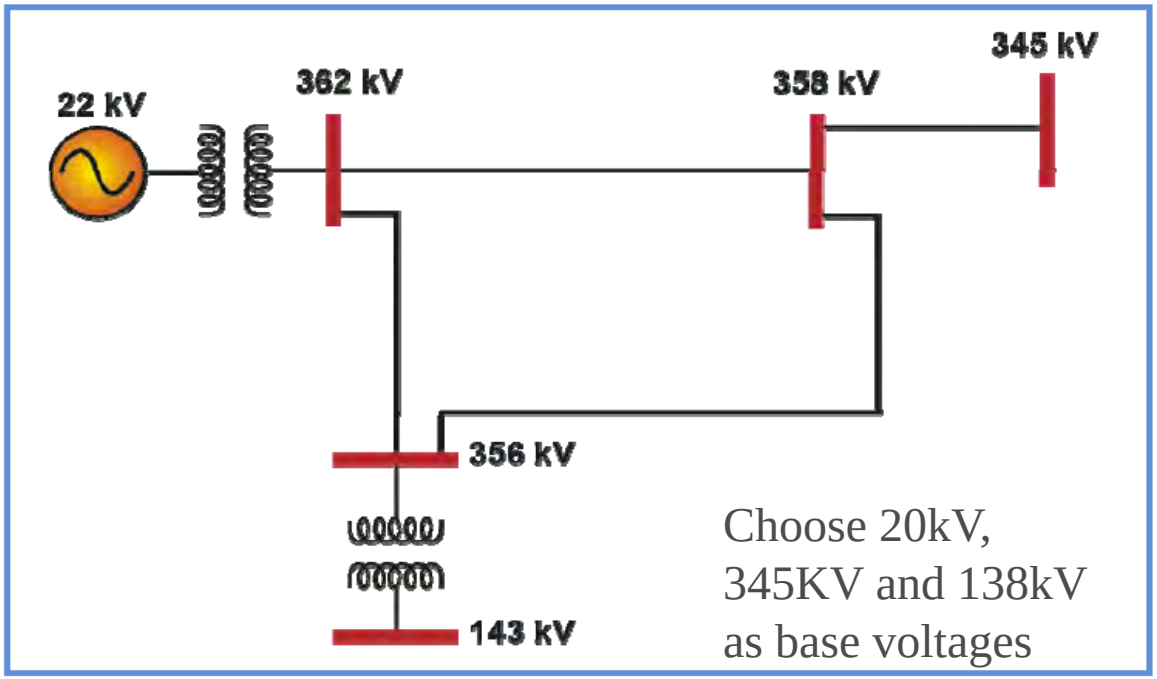

Figure 2-6. Example of the Usage of the Per-Unit System

  - Neglecting different voltage levels of transformers, lines and generators
  - Powers, voltages, currents and impedances are expressed as decimal fractions of respective base quantities

(Source: EPRI Dynamic Tutorial)

- Four base quantities are required to completely define a per-unit system

$$S_{pu} = \frac{S}{S_n} \qquad E_{pu} = \frac{E}{E_n} \qquad I_{pu} = \frac{I}{I_n} \qquad Z_{pu} = \frac{Z}{Z_n}$$

- We need to select two independent base quantities of the four and calculate the other two, e.g. selecting S_n and E_n

$$I_n = \frac{S_n}{E_n} \qquad Z_n = \frac{E_n}{I_n} = \frac{\left(E_n\right)^2}{S_n}$$

- For a transformer:
  - Usually, S_n, E_{pn}, E_{sn} and the total impedance Z_p (in p.u. or %) referred to the primary side are given.

$$I_{np} = \frac{S_n}{E_{np}} \qquad I_{ns} = \frac{S_n}{E_{ns}} \qquad a = \frac{N_p}{N_s} = \frac{E_{np}}{E_{ns}}$$

$$Z_{np} = \frac{E_{np}}{I_{np}} = \frac{\left(E_{np}\right)^2}{S_n} \quad (\Omega) \qquad Z_{ns} = \frac{E_{ns}}{I_{ns}} = \frac{\left(E_{ns}\right)^2}{S_n} \quad (\Omega)$$

$$Z_p(\Omega) = Z_p(\text{p.u.}) \times Z_{np}$$

Examples 10-5, 10-6, 10-7, 10-8 & 10-10