Voltage Regulation

- With the primary voltage held constant at its rated value, the voltage regulation is % change of the secondary voltage from no-load to full load (rated)

$$\text{Voltage Regulation} = \frac{|E_{NL}| - |E_{FL}|}{|E_{FL}|} \times 100$$

E_{NL}: secondary voltage at no-load

E_{FL}: secondary voltage at full-load

- The voltage regulation depends on the power factor of the load on the secondary side
  - If the load is capacitive, the full-load voltage may exceed the no-load voltage, in which case the voltage regulation becomes negative

Construction of a power transformer

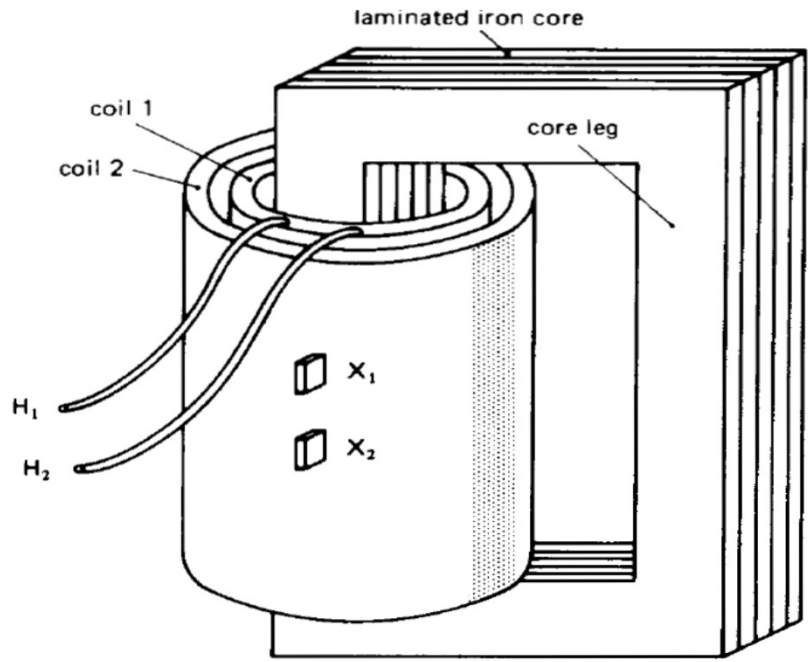

Figure 10.9a
Construction of a simple transformer.

- Core: made of iron for high permeability; laminated and high resistive to reduce iron losses
- Windings: the primary and secondary coils are wound closely on top of each other with careful insulation for tight coupling; the HV winding has more turns but uses a smaller size of conductor, so copper/aluminum of two windings are about the same

Standard terminal markings and polarity tests

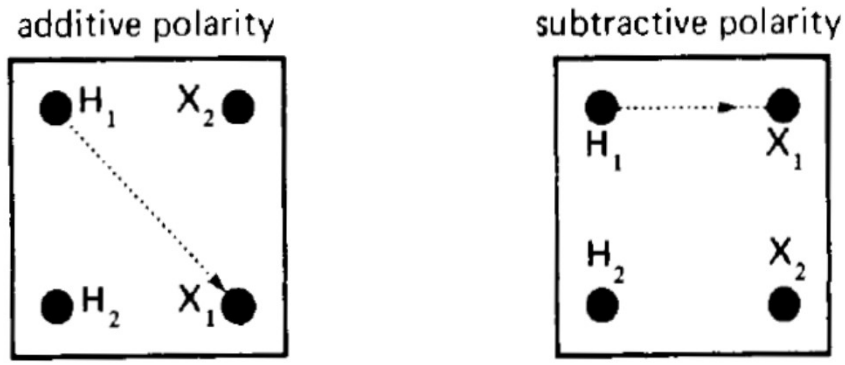

Figure 10.10
Additive and subtractive polarity depend upon the location of the H_1-X_1 terminals.

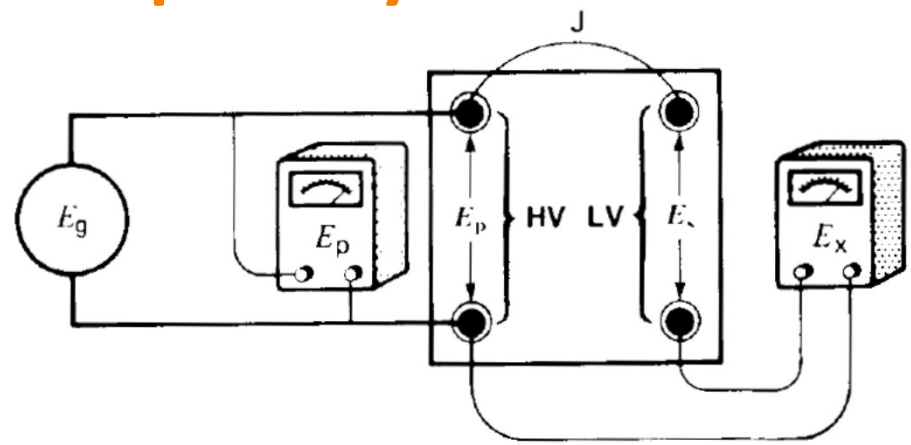

Figure 10.11
Determining the polarity of a transformer using an ac source.

- High-Voltage winding (H_1&H_2) and Low-Voltage winding (X_1& X_2)

  $E_{H1,H2}/E_{X1,X2}=E_H/E_X=N_H/N_X$
- Subtractive polarity is standard for 1-phase 200+ kVA transformers
- Polarity test:
  1. Connect HV winding to a low voltage source E_g
  2. Connect a jumper J between any two adjacent HV and LV terminals
  3. Connect two voltmeters as shown in Figure 10.11
  4. The polarity is additive if $|E_x|>|E_p|$ or, otherwise, is subtractive.

The Per-Unit System

- Quantity in **Per-Unit** = **Actual** quantity / **Base or nominal** value of quantity
- Why per-unit notations?

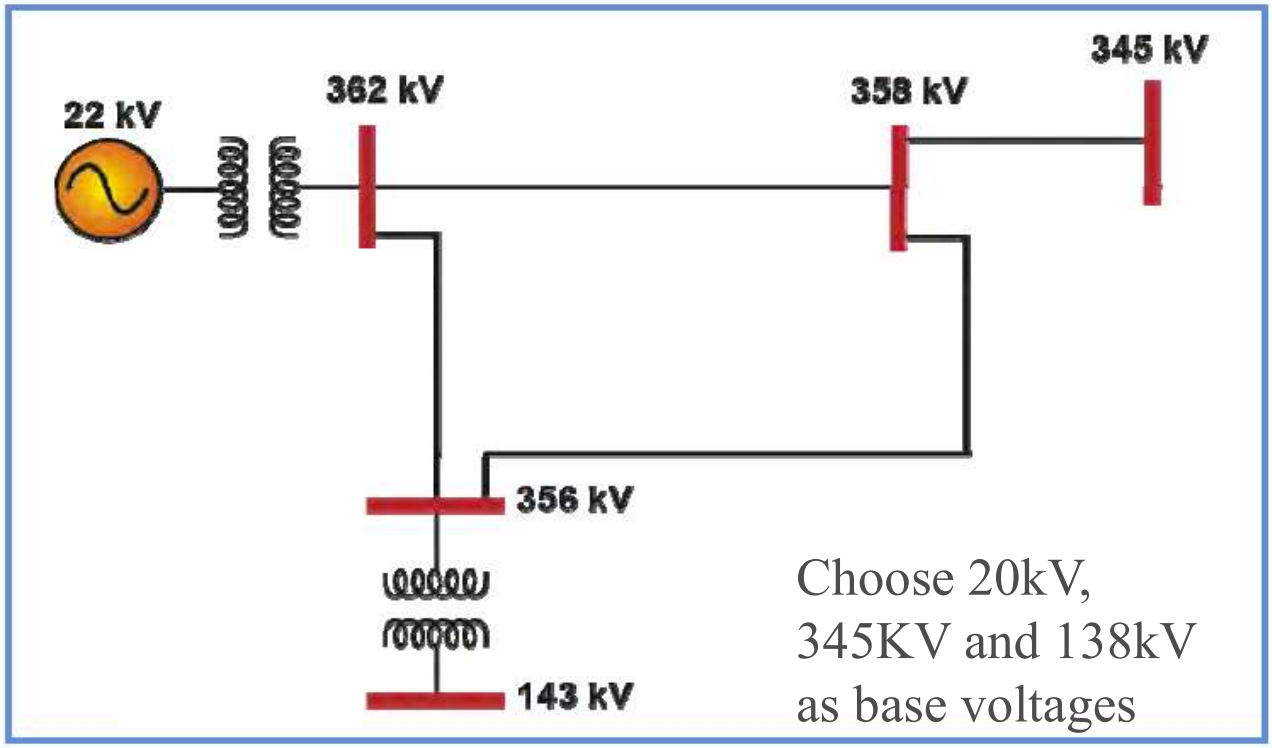

Figure 2-6. Example of the Usage of the Per-Unit System

  - Neglecting different voltage levels of transformers, lines and generators
  - Powers, voltages, currents and impedances are expressed as decimal fractions of respective base quantities

(Source: EPRI Dynamic Tutorial)

- Four base quantities (real numbers) are required to completely define a per-unit system

$$S_{pu} = \frac{S}{S_B} \qquad E_{pu} = \frac{E}{E_B} \qquad I_{pu} = \frac{I}{I_B} \qquad Z_{pu} = \frac{Z}{Z_B}$$

- We need to select two independent base quantities of the four and calculate the other two, e.g. selecting S_B and E_B

$$I_B = \frac{S_B}{E_B} \qquad Z_B = \frac{E_B}{I_B} = \frac{(E_B)^2}{S_B}$$

- For a transformer, these parameters are usually given:

  $\mathbf{S_n}$ (in kVA) considered as S_B

  $\boldsymbol{E_{np}}$ (in V) and $\boldsymbol{E_{ns}}$ (in V) considered as E_{Bp} and E_{Bs}

  $\boldsymbol{Z_p}$ (in p.u. or %), i.e. the total impedance referred to the primary side.

$$I_{Bp} = I_{np} = \frac{S_n}{E_{np}} \qquad I_{ns} = \frac{S_n}{E_{ns}} \qquad a = \frac{N_p}{N_s} = \frac{E_{np}}{E_{ns}}$$

$$Z_{Bp} = Z_{np} = \frac{E_{np}}{I_{np}} = \frac{(E_{np})^2}{S_n} \quad (\Omega) \qquad Z_{Bs} = Z_{ns} = \frac{E_{ns}}{I_{ns}} = \frac{(E_{ns})^2}{S_n} \quad (\Omega)$$

$$Z_p(\Omega) = Z_p(\text{p.u.}) \times Z_{Bp}$$

Examples 10-5, 10-6, 10-7, 10-8 & 10-10

Autotransformer

- A conventional two-winding transformer can be changed to an autotransformer by connecting its two coils in series (note: four different ways to connect).
- The connection may use a sliding contact to providing variable output voltage.

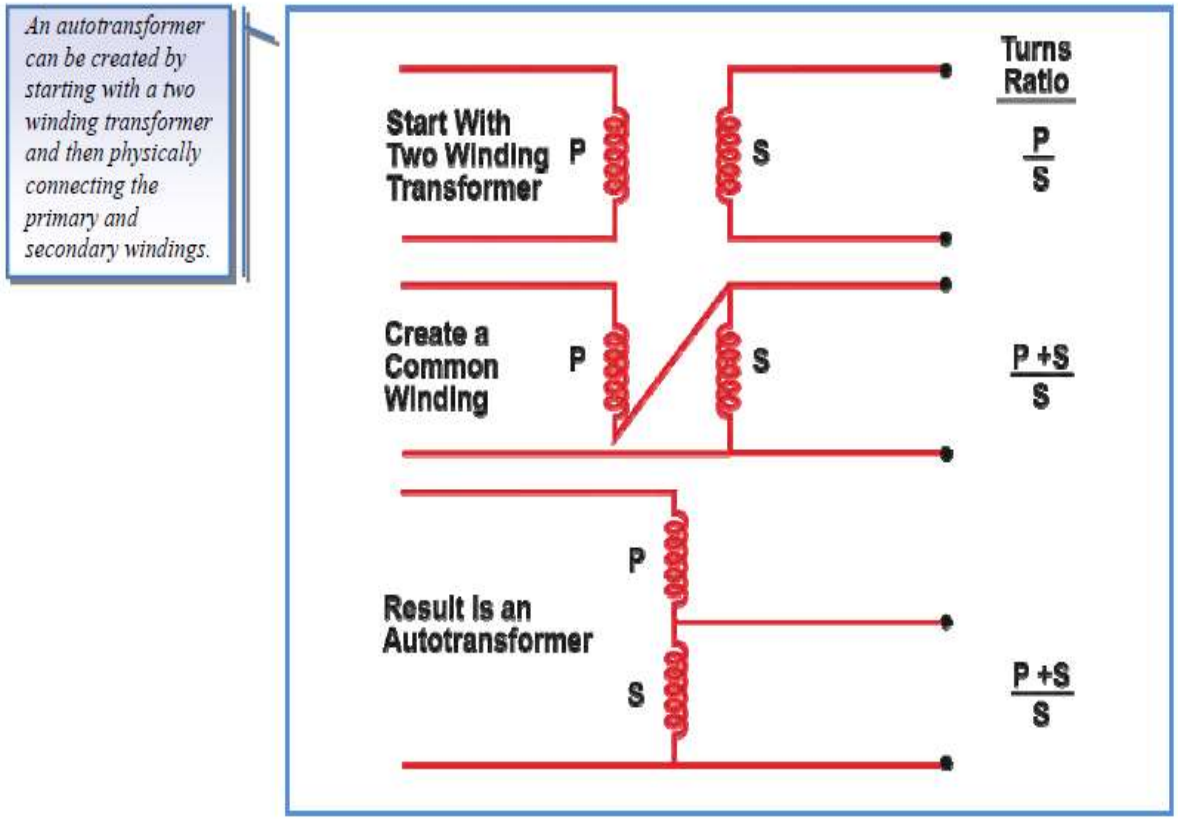

Figure 2-80. Autotransformer Evolution From a Two-Winding Transformer

(Source: EPRI Power System Dynamic Tutorial)

20MVA (115/69kV) McGraw-Edison Substation Auto-Transformer (Y-Y) (Source: http://www.tucsontransformer.com)

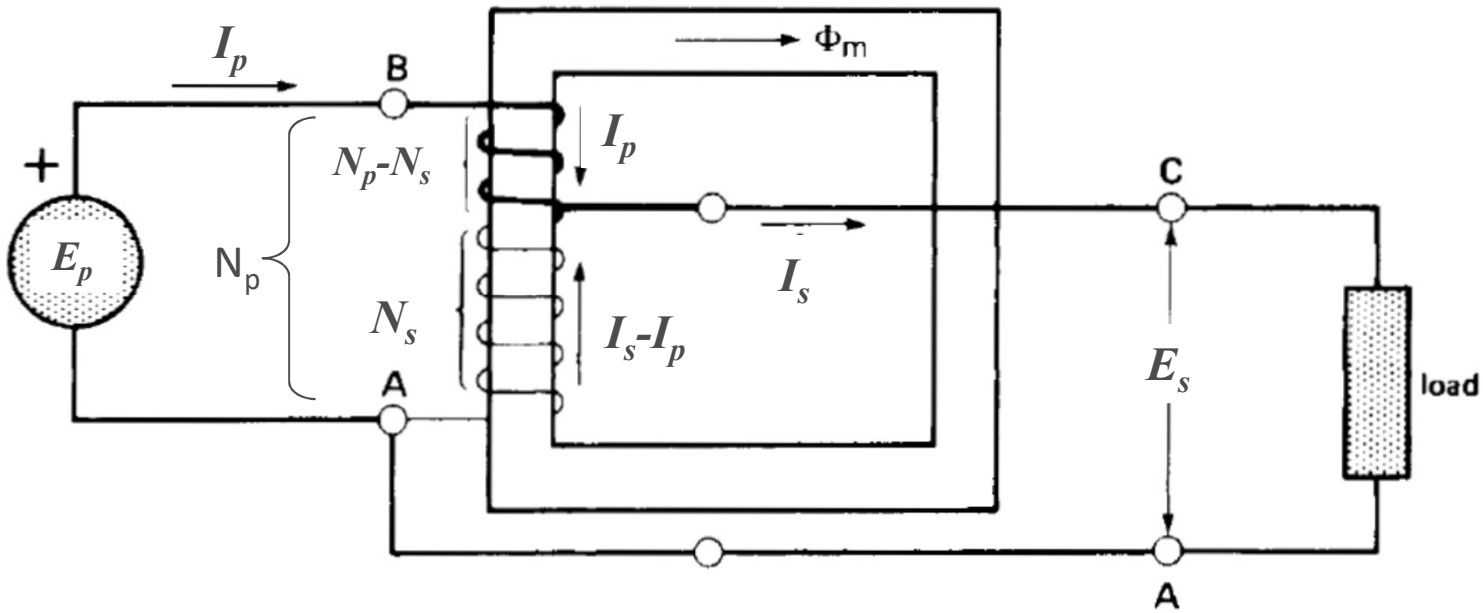

- The primary and secondary windings have a common terminal A, and hence are not isolated from each other

$$E_p/E_s=E_{CA}/E_{BA}=N_s/N_p \quad \text{(There is always } N_p>N_s\text{)}$$

$$I_pN_p=I_sN_s \Leftrightarrow \qquad I_p(N_p-N_s)=(I_s-I_p)N_s$$

$$E_pI_p=E_sI_s$$

- An autotransformer has a smaller size (or equivalently, a higher kVA rating for the same size) but loses insulation between primary and secondary windings