ECE 325 – Electric Energy System Components
5- Transmission Lines

Instructor:

Kai Sun

Fall 2018

Content

(Materials are from Chapter 25)

- Overview of power lines
- Equivalent circuit of a line
- Voltage regulation and power transmission of transmission lines

Overview

Corona discharge on insulator string of a 500 kV line (source: wikipedia.org)

- Types of transmission lines
  - Overhead lines
  - Underground Cables (less than 1%)
- Properties
  - Series Resistance (stranding and skin effect)
  - Series Inductance (magnetic & electric fields; flux linkages within the conductor cross section and external flux linkages)
  - Shunt Capacitance (magnetic & electric fields; charge and discharge due to potential difference between conductors)
  - Shunt Conductance (due to leakage currents along insulators or corona discharge caused by ionization of air)
- Line-to-line voltage levels
  - 69kV, 115kV, 138kV and 161kV (sub-transmission)
  - 230kV, 345kV, and 500kV (EHV)
  - 765kV (UHV)

Overhead Transmission Lines

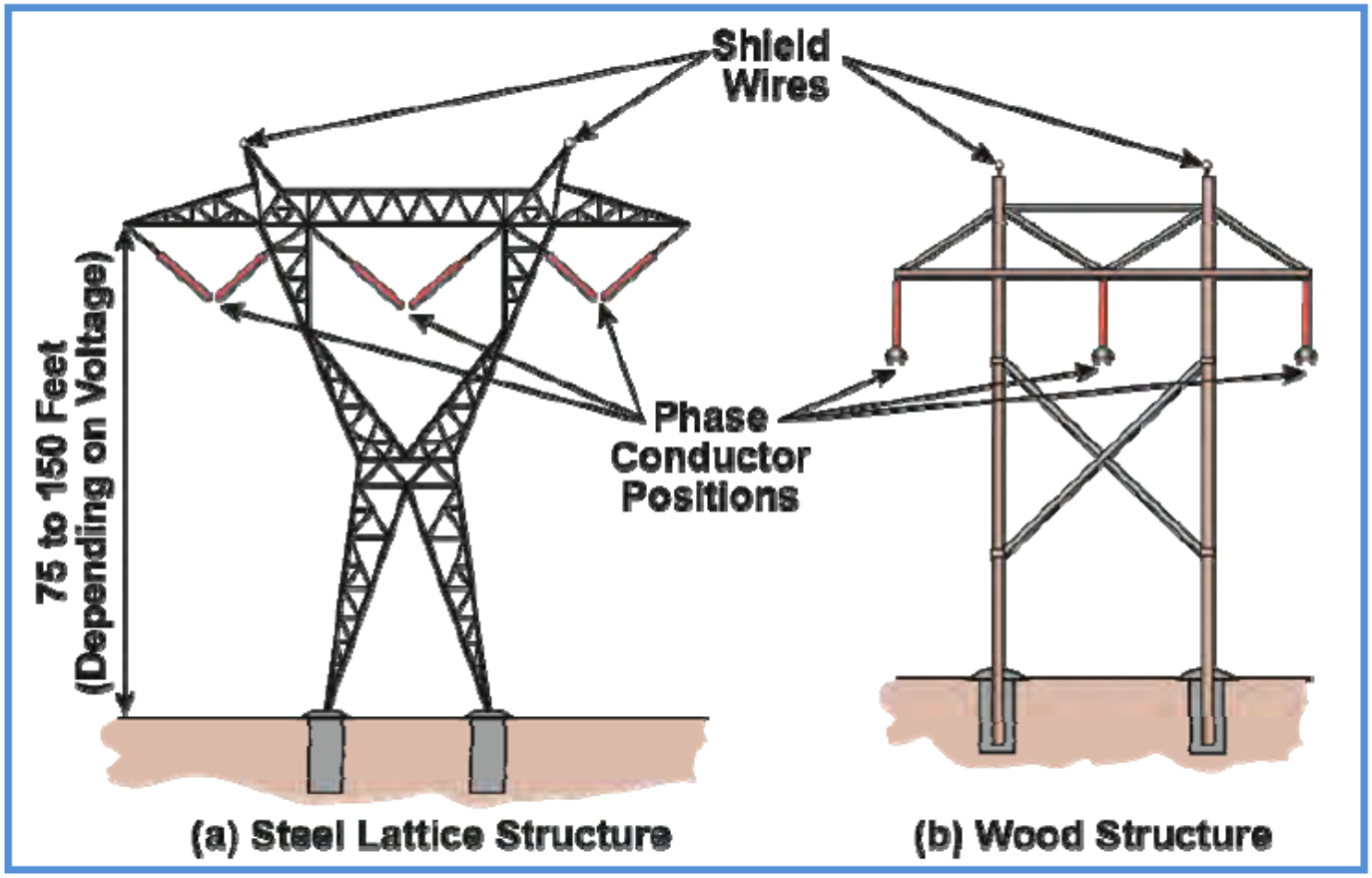

Figure 2-83. Transmission Line Structures

Shield wires (ground wires) are ground conductors used to protect the transmission lines from lightning strikes

(Source: wikipedia.org and EPRI dynamic tutorial)

Overhead Transmission Lines

- Many strands to reduce series resistance
- Materials
  - AAC (All Aluminum Conductor),
  - AAAC (All Aluminum Alloy Conductor)
  - ACSR (Aluminum Conductor Steel Reinforced)
  - ACAR (Aluminum Conductor Alloy Reinforced)
  - ACCC (Aluminum Conductor Composite Core)
- Why not copper?
  - Copper lines have higher costs and lower strength-to-weight ratios
- Bundled conductors to reduce series reactance
  - Preferred for high voltages, e.g. 2-conductor bundles for 230kV, 3-4 for 345-500kV, and 6 for 765kV

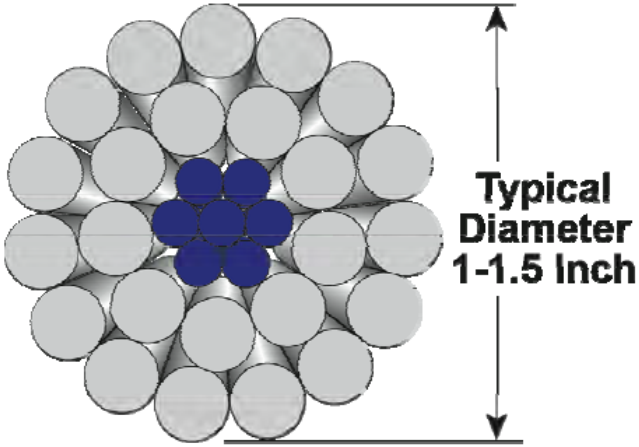

ACSR (7 steel and 24 aluminum strands)

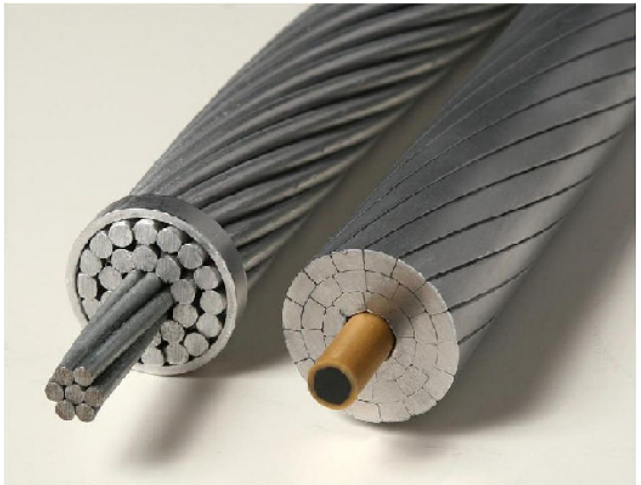

24/7 ACSR and modern ACCC conductors

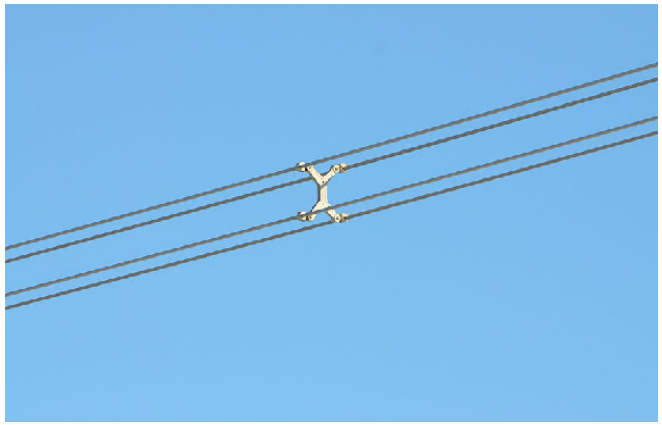

A bundle of 4 conductor

Equivalent circuit of a transmission line

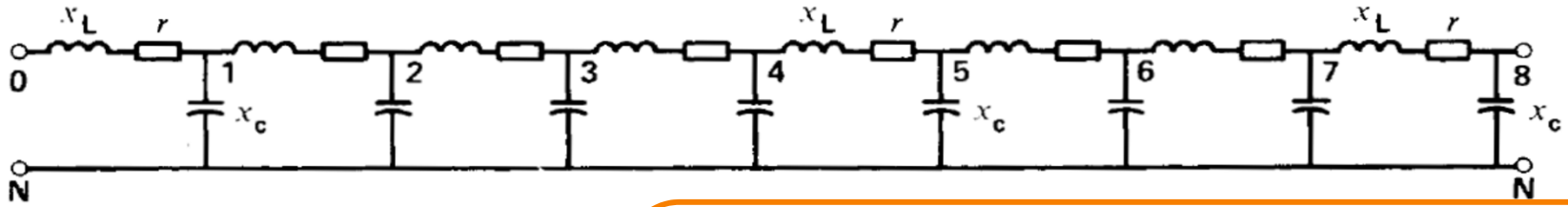

Figure 25.13
Distributed impedance of a transmission line.

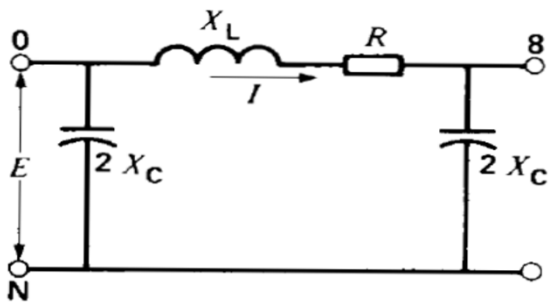

Figure 25.14
Equivalent lumped circuit of a transmission line.

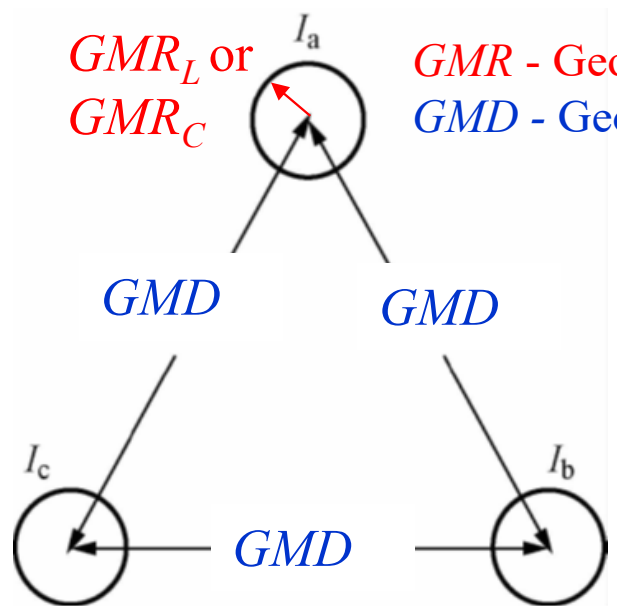

GMR - Geometric Mean Radius
GMD - Geometric Mean Distance

$$L \propto \ln \frac{GMD}{GMR_L}$$

$$C \propto \ln \frac{GMR_C}{GMD}$$

- $R=r\times n$, $X_L=x_L\times n$, $X_C=x_C/n$: With the increase of n (i.e. the length of the line), R and X_L increase but X_C decreases
- For HV lines, $R<<X_L$

TABLE 25C TYPICAL IMPEDANCE VALUES PER KILOMETER FOR 3-PHASE, 60 HZ LINES

Type of line	x_L [Ω]	x_C [Ω]
aerial line	0.5	300 000
underground cable	0.1	3 000

Simplifying the equivalent circuit

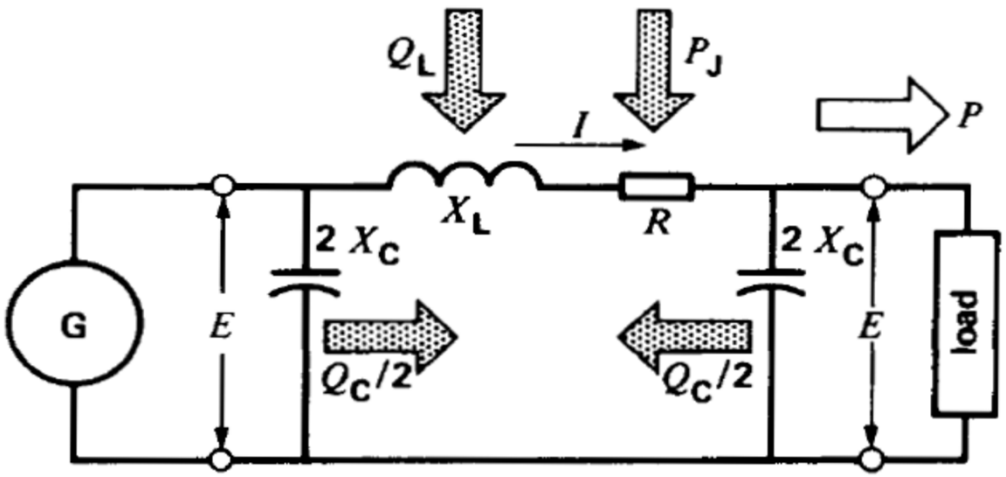

Figure 25.17
Active and reactive powers of a transmission line.

$R=r\times N$, $X_L=x_L\times N$, $X_C=x_C/N$

HV lines: $R<<X_L$

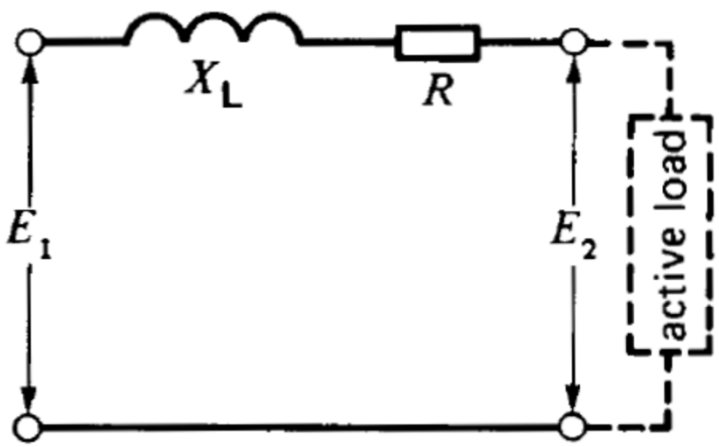

Figure 25.18
Equivalent circuit of a short LV line.

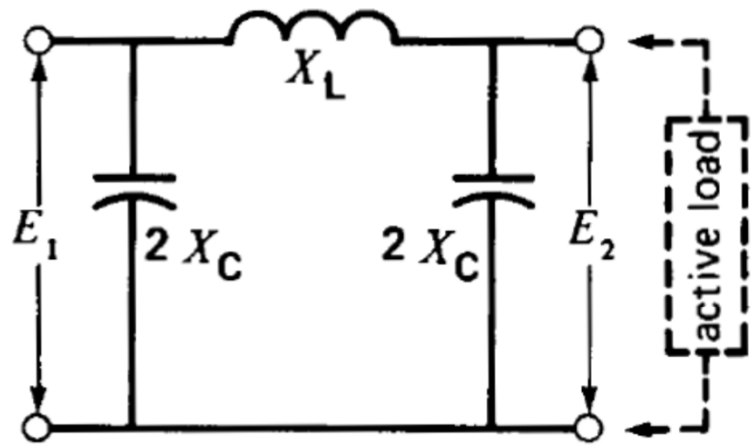

Figure 25.19
Equivalent circuit of a long HV line.

Example 25-3

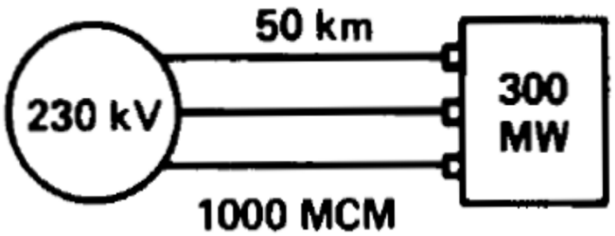

(1 MCM = 0.5067 mm²)

$r = 0.065\ \Omega/\text{km}$

$x_L = 0.5\ \Omega/\text{km}$

$x_C = 300\ \text{k}\Omega\cdot\text{km}$

a. Find the equivalent circuit

b. Calculate P_J (loss), Q_L and Q_C

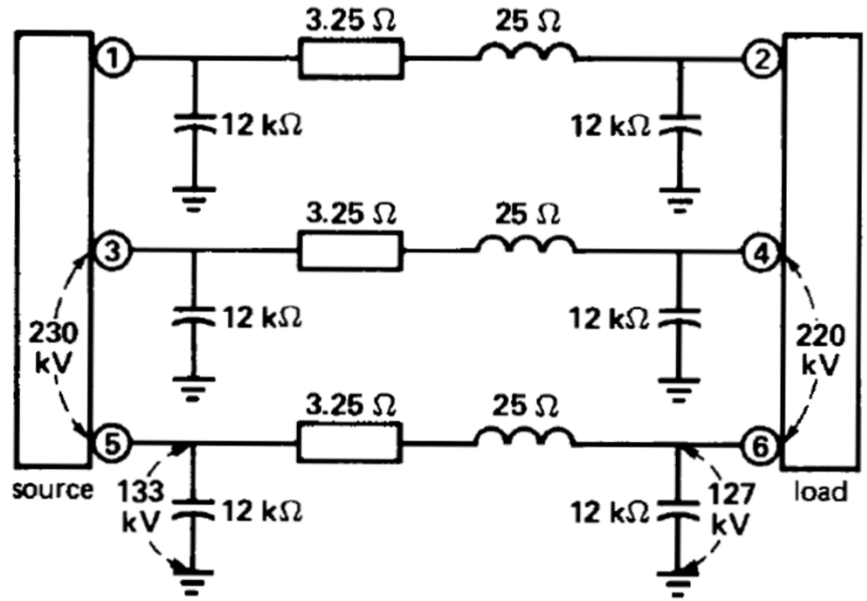

Figure 25.16
Equivalent circuit of a 3-phase line.

R=0.065 ×50= 3.25Ω, X_L=0.5 ×50= 25Ω

X_C=300,000/50=6kΩ, so $2X_C$= 12k Ω

Note X_C=480X_L and X_L=7.7R

Consider one phase:

P=300/3=100MW

$|E|$=230/√3=133kV

$|I|$=100MW/133kV=750A

$P_J=|I|^2R$=1.83MW=0.0183P

$Q_L=|I|^2X_L$=14.1Mvar

$Q_C=|E|^2/X_C$=3Mvar <<Q_L