Analog Communication Systems

Receivers for CW Modulation

In addition to demodulation a receiver must

1. Select the desired signal
2. Reject the other signals
3. Amplify the signal

Some of the amplification should occur before demodulation because the demodulator typically does not work well with small signals (usually because of non-zero forward bias diode voltages). These functions could be performed by a high-gain, tunable, bandpass amplifier. We could follow this amplifier with an envelope detector to recover the information signal. The problem with this approach is that the high-gain, tunable, bandpass amplifier with a constant bandwidth equal to the transmitted bandwidth is difficult to design and expensive to produce.

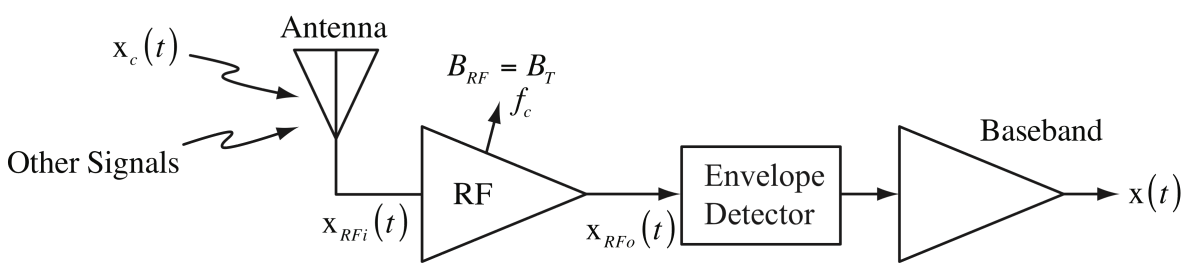

Receivers for CW Modulation

An alternative to the previous design would be to use a synchronous detector instead of an envelope detector. But we still have the problem of the design and expense of the high-gain, tunable bandpass amplifier and now we must also have a local oscillator locked to the incoming carrier frequency and phase. This design is worse than the previous one.

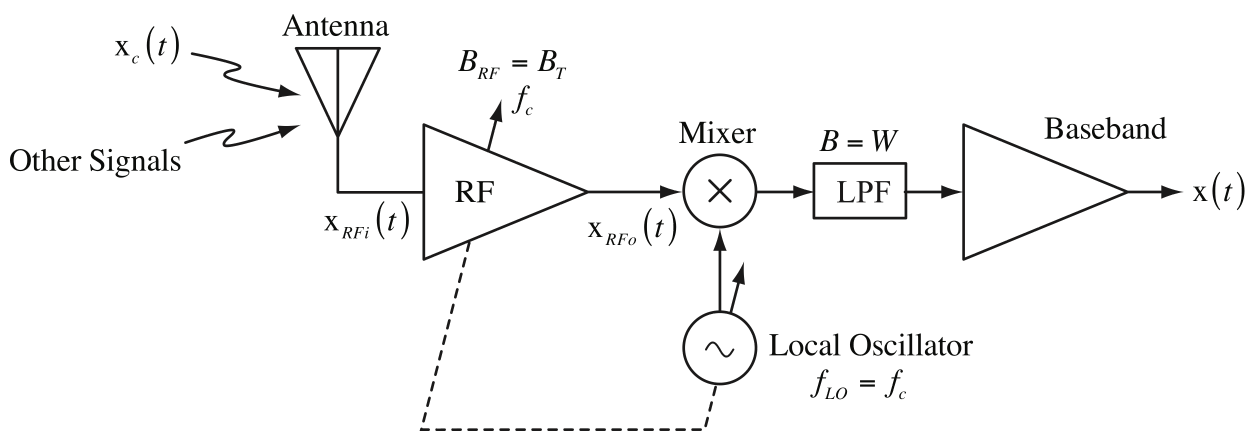

Receivers for CW Modulation

Instead of using a high-gain, tunable bandpass amplifier we could use a high-gain broadband amplifier and do all the filtering with a lowpass filter of bandwidth W after demodulation. This avoids the tunable bandpass amplifier design problem. This design is better than the previous one but still has the problem of locking the local oscillator to the incoming carrier frequency and phase.

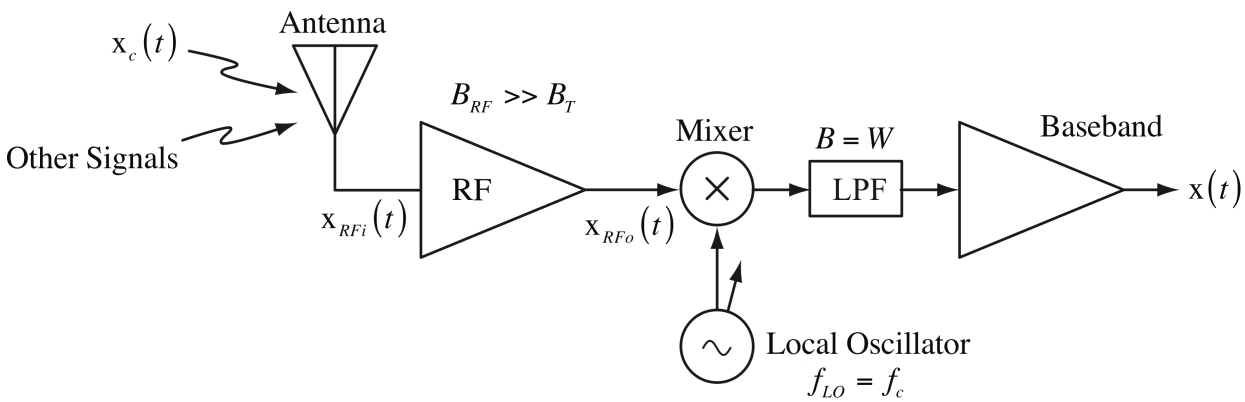

Receivers for CW Modulation

A design that avoids the problems of the previous designs is the **superheterodyne receiver**. Instead of mixing the incoming signal directly to baseband, mix it down to an **intermediate frequency** (**IF**) and bandpass filter it there with a fixed bandpass filter of bandwidth $2W$. Then use an envelope detector to recover the information signal.

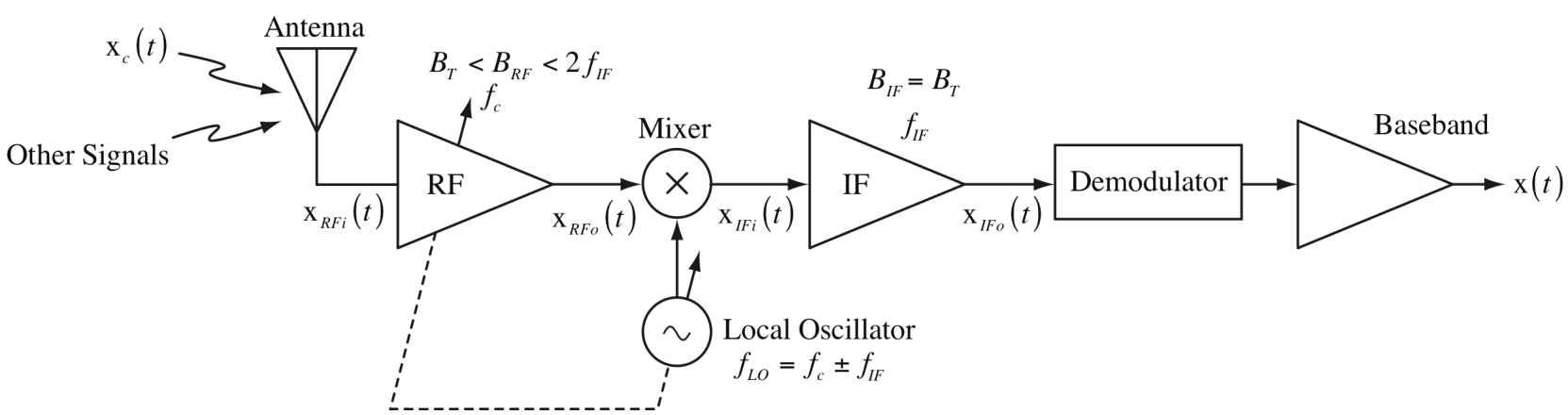

Receivers for CW Modulation

The superheterodyne receiver has two amplification and filtering stages prior to demodulation. The first one is an RF amplifier/bandpass filter centered at the carrier frequency of the station we wish to demodulate. Its bandwidth B_{RF} is adequate to pass the transmission bandwidth B_T comfortably. This is the **selection** stage. The received signal at the antenna is $\mathrm{x}_{RFi}(t) = \sum_{k=1}^{N} A_{ck}\left(1+\mu_k \mathrm{x}_k(t)\right)\cos(\omega_{ck} t)$ where N is the number of AM stations within reception range. The spectrum of received stations is

$$\mathrm{X}_{RFi}(f) = \sum_{k=1}^{N}\left(A_{ck}/2\right)\left\{\delta(f-f_{ck})+\delta(f+f_{ck})+\mu_k\left[\mathrm{X}_k(f-f_{ck})+\mathrm{X}_k(f+f_{ck})\right]\right\}$$

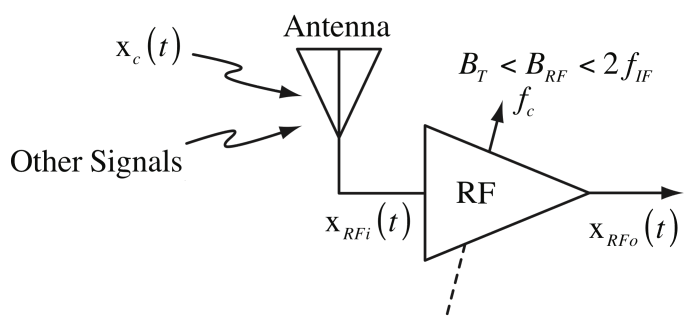

Receivers for CW Modulation

The RF amplifier filters the received signal with a bandpass filter centered at the carrier frequency of the desired station and produces the signal $\mathrm{X}_{RFo}(f) = \mathrm{X}_{RFi}(f)\mathrm{H}_{BP}(f)$. Suppose there are four stations with significant signal strengths at carrier frequencies $f_{c1} = 670$ kHz, $f_{c2} = 990$ kHz, $f_{c3} = 1180$ kHz and $f_{c4} = 1580$ kHz. Then

$$\mathrm{X}_{RFo}(f) = \frac{\mathrm{H}_{BP}(f)}{2}\sum_{k=1}^{4} A_{ck}\left\{\left[\delta(f - f_{ck}) + \delta(f + f_{ck})\right] + \mu_k\left[\mathrm{X}_k(f - f_{ck}) + \mathrm{X}_k(f + f_{ck})\right]\right\}$$

Also, suppose we want to receive the station at 670 kHz. Then the bandpass amplifier's frequency response will be centered at 670 kHz.

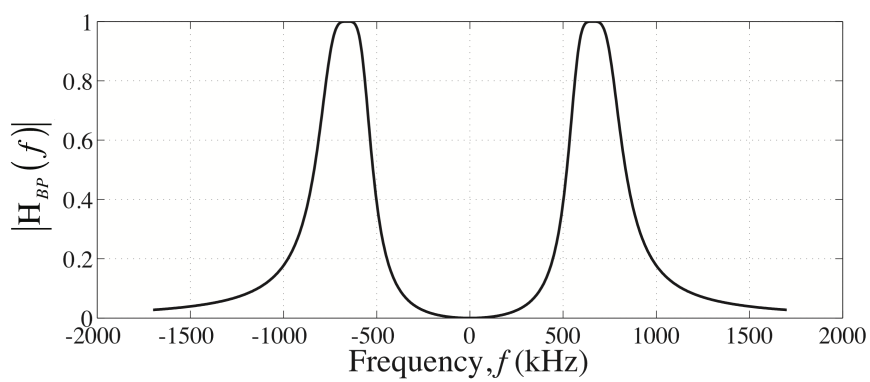

Receivers for CW Modulation

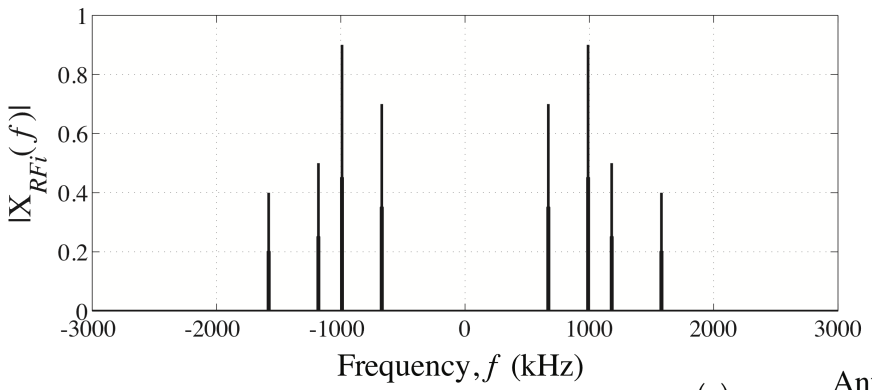

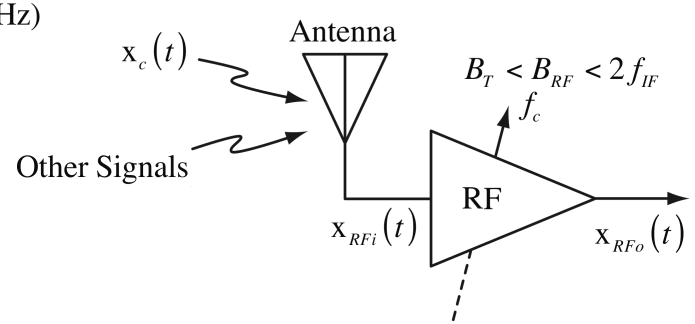

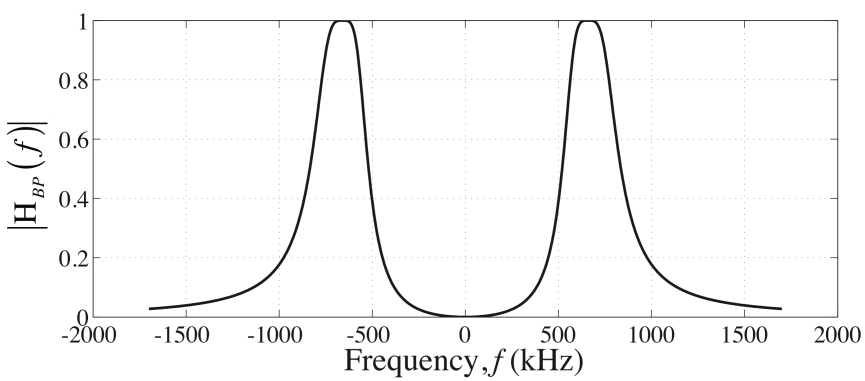

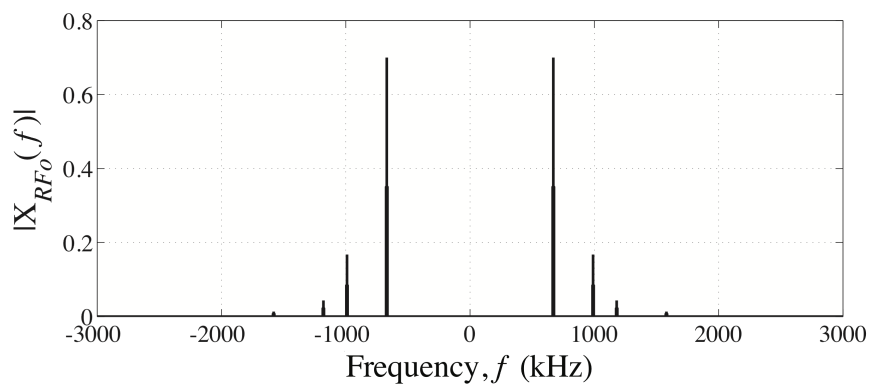

Receivers for CW Modulation

The output signal from the RF amplifier is mixed with (multiplied by) the local oscillator signal. The RF center frequency f_c and the local oscillator frequency f_{LO} are coupled together such that $f_{LO} = f_c \pm f_{IF}$ where f_{IF} is the intermediate frequency . The relation $f_{LO} = f_c \pm f_{IF}$ implies that $\left| f_c - f_{LO} \right| = f_{IF}$.

$$\mathrm{x}_{IFi}(t) = \mathrm{x}_{RFo}(t)\cos(\omega_{LO} t) \xleftrightarrow{\mathscr{F}} \mathrm{X}_{IFi}(f) = (1/2)\left[\mathrm{X}_{RFo}(f - f_{LO}) + \mathrm{X}_{RFo}(f + f_{LO})\right].$$

The IF input signal is

$$\mathrm{X}_{IFi}(f) = \frac{\mathrm{H}_{BP}(f)}{4}\sum_{k=1}^{N} A_{ck}\left\{\begin{bmatrix}\delta(f - f_{LO} - f_{ck}) \\ +\delta(f - f_{LO} + f_{ck})\end{bmatrix} + \mu_k\begin{bmatrix}\mathrm{X}_k(f - f_{LO} - f_{ck}) \\ +\mathrm{X}_k(f - f_{LO} + f_{ck})\end{bmatrix} + \begin{bmatrix}\delta(f + f_{LO} - f_{ck}) \\ +\delta(f + f_{LO} + f_{ck})\end{bmatrix} + \mu_k\begin{bmatrix}\mathrm{X}_k(f + f_{LO} - f_{ck}) \\ +\mathrm{X}_k(f + f_{LO} + f_{ck})\end{bmatrix}\right\}$$

Receivers for CW Modulation

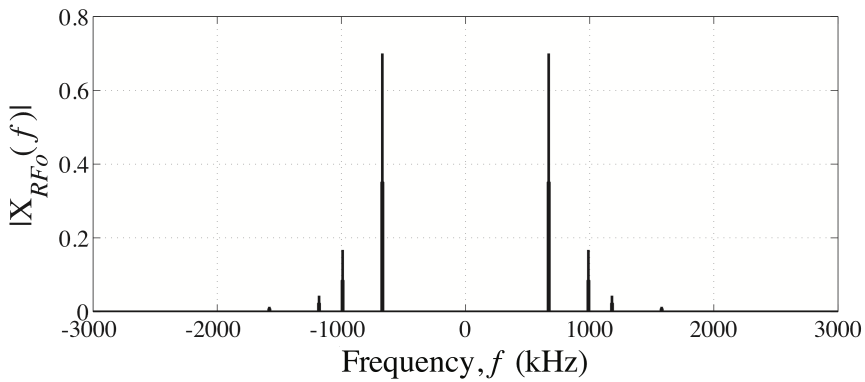

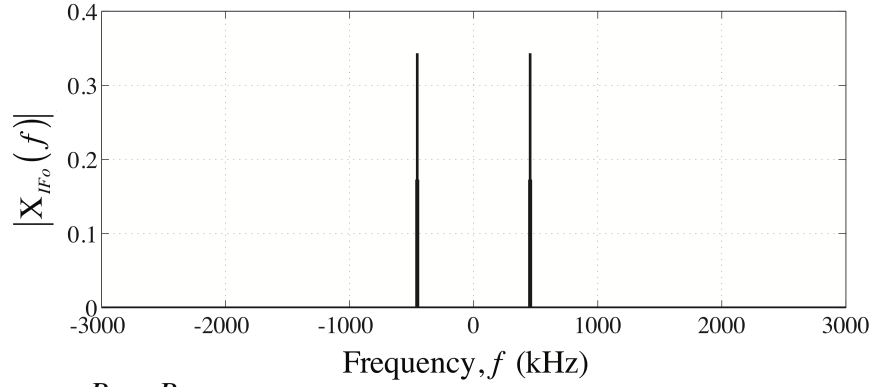

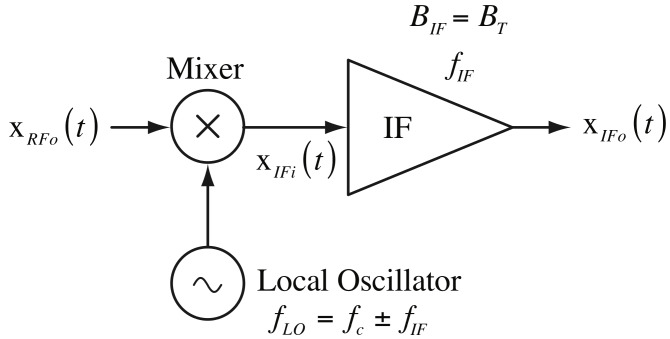

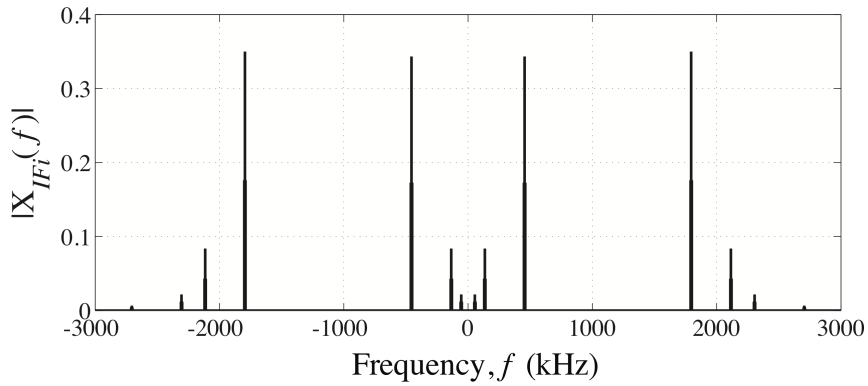

Receivers for CW Modulation

The two stations at 670 and 1580 both shift to be centered at 455 kHz. So, unless the 1580 signal has been filtered out by the RF amplifier, we will have **crosstalk** (hearing two stations at once). The signal at 1580 is at the **image** frequency of 670 ($670 + 2 \times 455$).

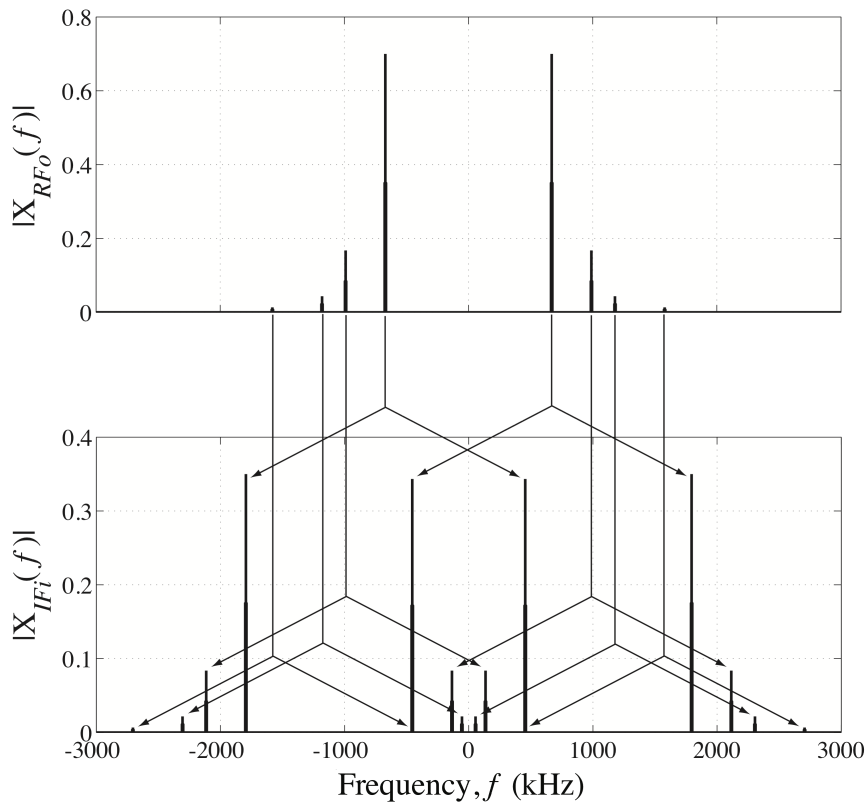

Receivers for CW Modulation

There are several parameters or "figures of merit" for receivers that are in common use.

Sensitivity - The minimum input voltage necessary to produce the specified signal-to-noise ratio (S/N) at the output of the IF section.

Dynamic Range - The ratio of the maximum input signal strength the receiver can handle without significant distortion to the minimum signal strength at which it can meet the S/N requirement

Selectivity - A measure of the ability of a radio receiver to select a particular frequency or particular band of frequencies and reject all unwanted frequencies

Noise Figure - The ratio of the S/N at the input to the S/N at the output, usually expressed in dB

Image Rejection - The ratio of the response of the RF bandpass filter at the carrier frequency to its response at the image frequency, usually expressed in dB

Receivers for CW Modulation

If the local oscillator in a superheterodyne receiver is replaced by a **voltage-controlled oscillator (VCO)** then the local oscillator frequency can be controlled by a voltage and the pre-detection part of the receiver becomes a "voltage-tunable bandpass amplifier" with center frequency $f_0 = f_{LO} \pm f_{IF}$ and bandwidth $B = B_{IF}$.
If we now drive the VCO with the sawtooth waveform from a ramp generator and drive the horizontal deflection of an oscilloscope with the same sawtooth waveform and drive the vertical deflection with the output of the detector we have a **scanning spectrum analyzer**.

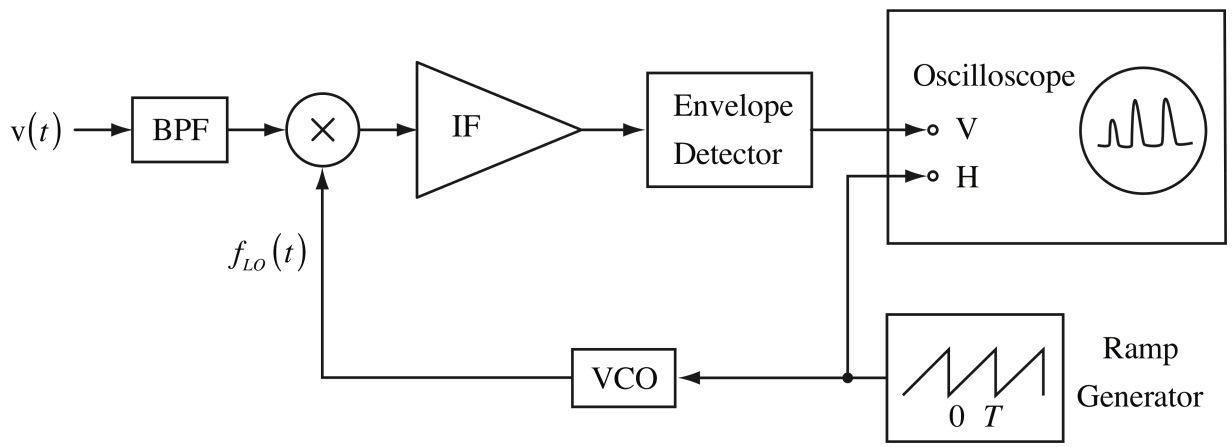

Receivers for CW Modulation

The ramp generator periodically sweeps the frequency linearly from f_1 to f_2 in T seconds, then quickly jumps back to f_1 to begin the next sweep. At the same time the oscilloscope horizontal deflection is swept linearly from left to right and then quickly back to the beginning point on the left. To get an accurate picture of the spectral content of the signal it must be either **quasi - periodic** or **stationary**. Quasi-periodic means that it seems to be periodic because it repeats a pattern for as long as we look at the spectral content with the spectrum analyzer. "Stationary" is a term applied to random signals meaning that the basic character of the signal does not change with time although the detailed variation does.

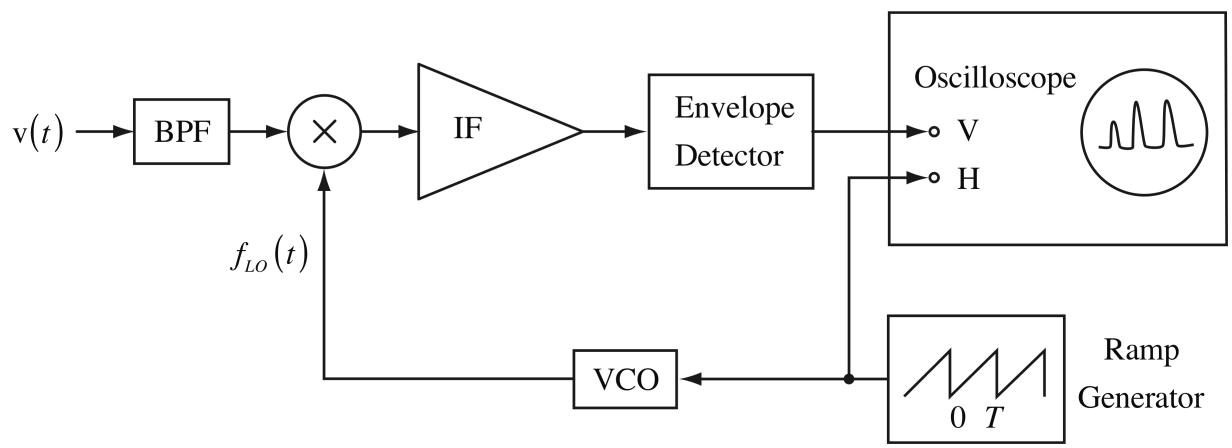

Multiplexing Systems

Multiplexing is the sending of multiple messages over the same communication channel. There are three basic types of multiplexing systems, **frequency-division multiplexing** (**FDM**), **time-division multiplexing** (**TDM**) and **code-division multiplexing** (**CDM**).

Multiplexing Systems

In FDM, multiple signals each modulate a **subcarrier**. The subcarriers are all at different frequencies $f_{c1}, f_{c2}, \cdots f_{cn}$. Then the modulated subcarriers are summed to produce the **baseband** signal $x_b(t)$. The type of modulation could be any of the types we have explored so far. Now each signal occupies a **slot** in the frequency domain.

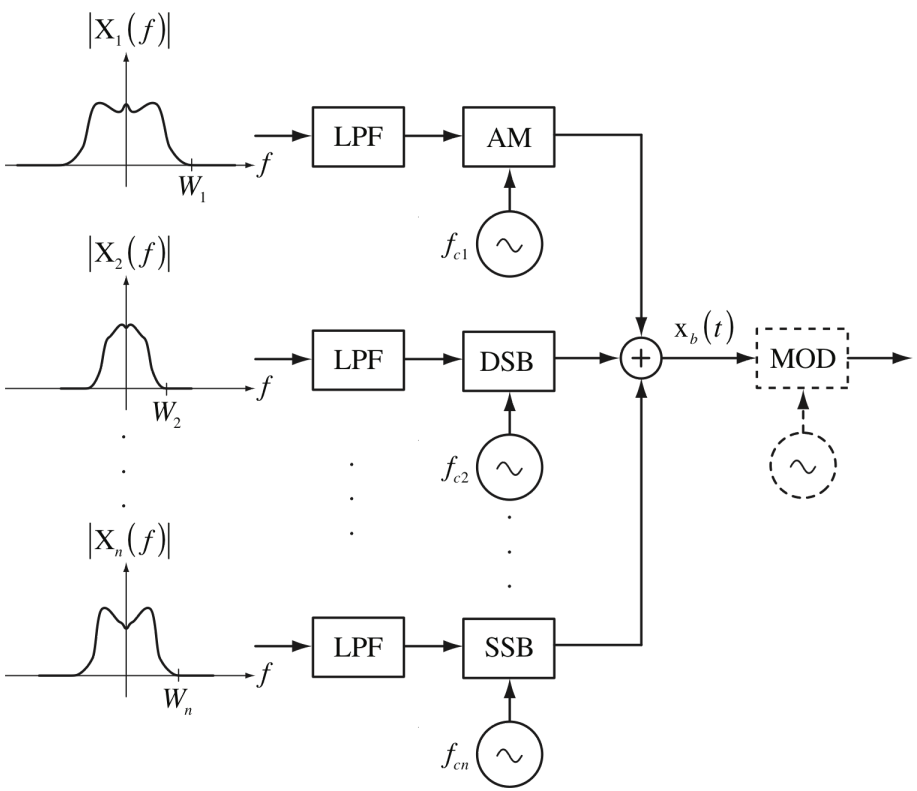

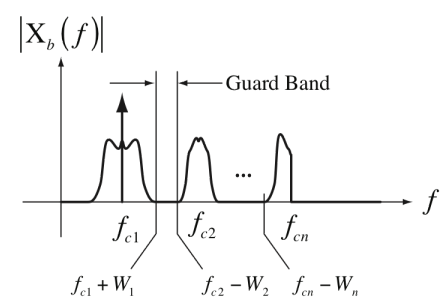

Multiplexing Systems

In time-division multiplexing (TDM), multiple signals occupy the same bandwidth but not the same time. The signals are all sampled at a rate f_s and the samples are interleaved in time. The sampling rate f_s should be greater than twice the bandwidth W of the signals. The time between samples on any single signal is $T_s = 1/f_s$ and this time interval is called a **frame**. If there are M channels, each sampled by pulse-amplitude modulation (PAM), there are M pulses in a frame and the interpulse spacing is T_s / M. The total number of pulses per second in the TDM signal is $r = Mf_s > 2MW$. r is called the **signaling rate**.

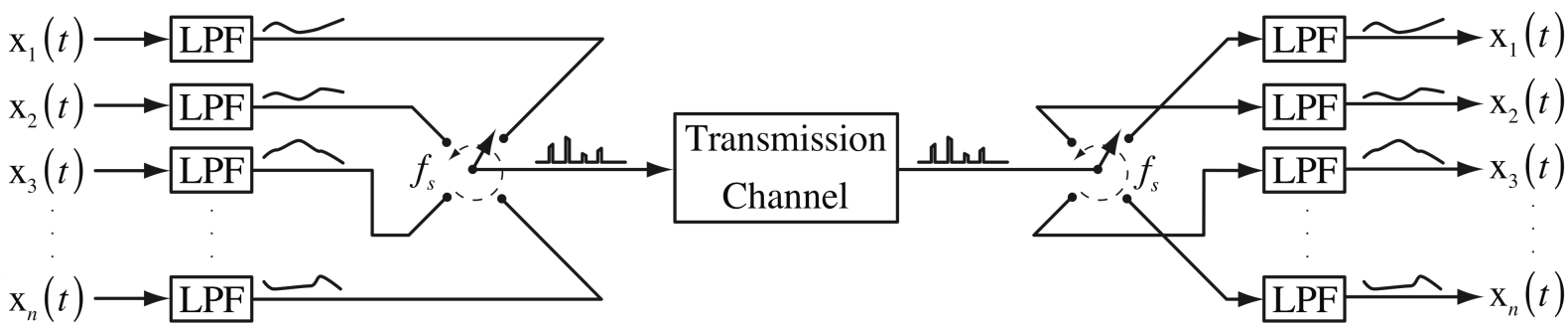

Multiplexing Systems

An essential consideration in any TDM system is the synchronization between the two ends of the channel. One simple technique is to dedicate one pulse per frame as a **marker**. The marker can be a pulse of a certain size or even the lack of a pulse. The pulses in the TDM information signal generally vary quite a bit but the marker pulse always looks the same. This puts into the TDM pulse stream a periodic component that can be detected and locked onto for synchronization.

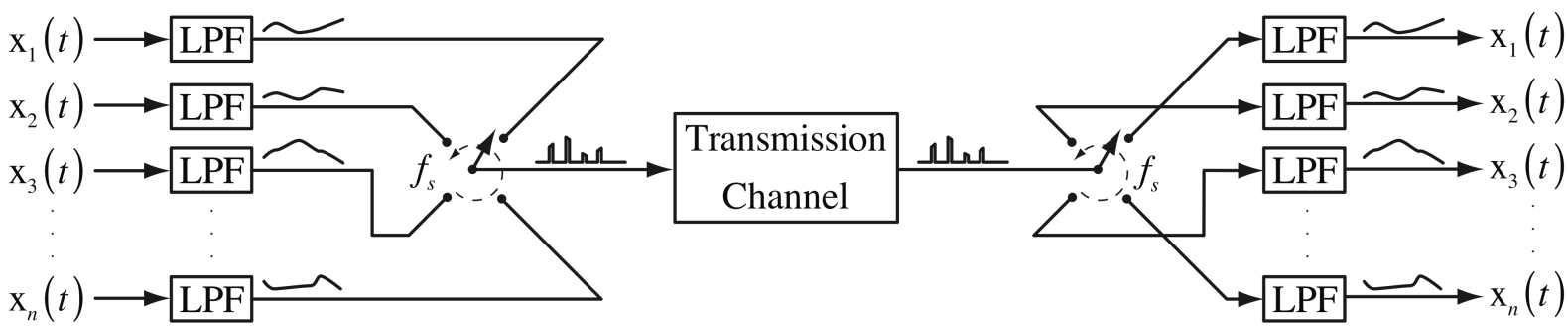

Multiplexing Systems

The problem of crosstalk that we explored in FDM systems occurs in TDM systems also. In FDM systems crosstalk was caused by overlap of the bandwidths of the multiplexed signals. The solution was to put guard bands between the signal bands to avoid overlap. In TDM crosstalk is caused by overlap of the pulses in time. The solution is to put **guard times** between pulses. As a simple introduction to the idea of pulse overlap, suppose the transmission channel acts like a first-order filter with -3 dB bandwidth B. If we apply a rectangular pulse to this filter the output pulse is spread out in time.

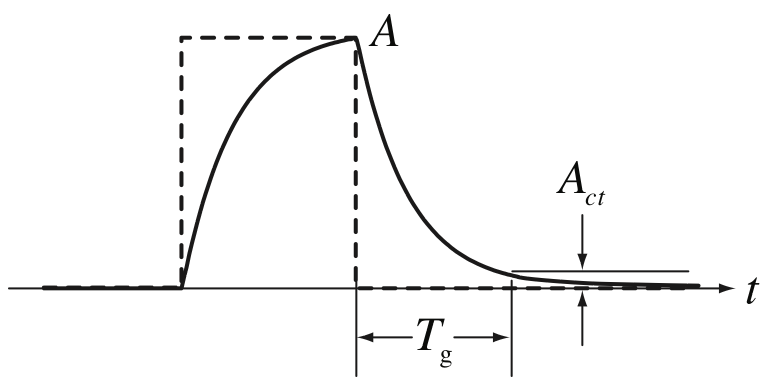

Multiplexing Systems

If we want to insure that the tail of one pulse is no larger than A_{ct} when the next pulse occurs we need a guard time between pulses of T_{g} as illustrated below. The **crosstalk reduction factor** k_{ct} is defined (in dB) by $k_{ct} \triangleq 10\log_{10}\left(\left(A_{ct}/A\right)^2\right)$ and for a first-order filter with bandwidth B,

$$k_{ct} = 10\log_{10}\left(\left(Ae^{-T_{\mathrm{g}}/\tau}/A\right)^2\right) = 10\log_{10}\left(e^{-4\pi BT_{\mathrm{g}}}\right) = 10\log_{10}\left(10^{-4\pi BT_{\mathrm{g}}\log_{10}(e)}\right)$$

$$k_{ct} = 10\left[-4\pi BT_{\mathrm{g}}\log_{10}(e)\right] = -54.57BT_{\mathrm{g}} \text{ dB}$$

So, for example, to keep the crosstalk below -30 dB,

$$-30 > -54.5BT_{\mathrm{g}} \Rightarrow T_{\mathrm{g}} > 0.5497/B$$

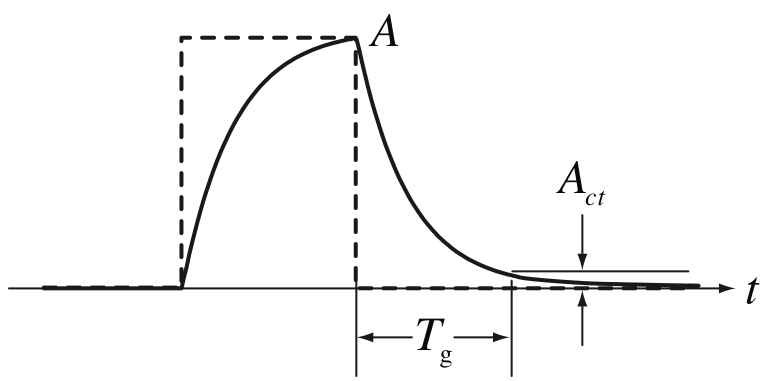

Phase and Frequency

Consider a cosine of the form $\mathrm{x}(t) = A\cos(\omega_0 t + \phi(t))$. The **phase** of this cosine is $\theta(t) = \omega_0 t + \phi(t)$ and $\phi(t)$ is its **phase shift**.

First consider the case $\phi(t) = 0$.

Then $\mathrm{x}(t) = A\cos(\omega_0 t)$

and $\theta(t) = \omega_0 t$.

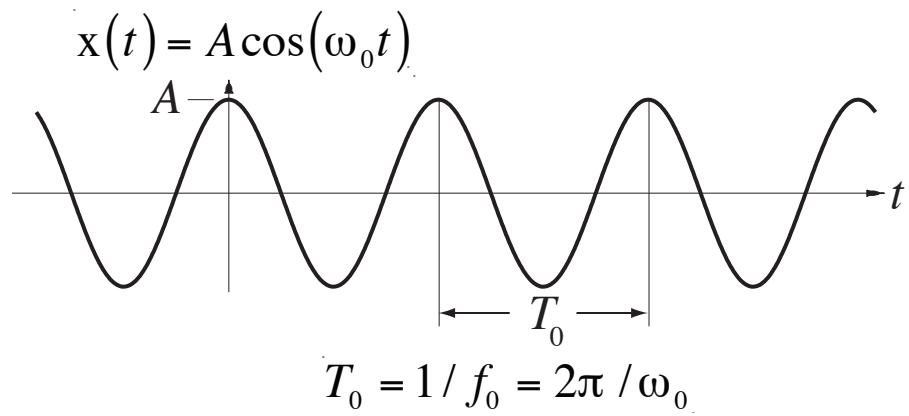

The radian frequency of this cosine is ω_0. Also, the first time derivative of $\theta(t)$ is ω_0. So one way of defining radian frequency is as the first derivative of phase. It then follows that phase is the integral of frequency.

Phase and Frequency

If $x(t) = A\cos(\omega_0 t)$ and $\theta(t) = \omega_0 t$. Then a graph of phase versus time would be a straight line through the origin with slope ω_0.

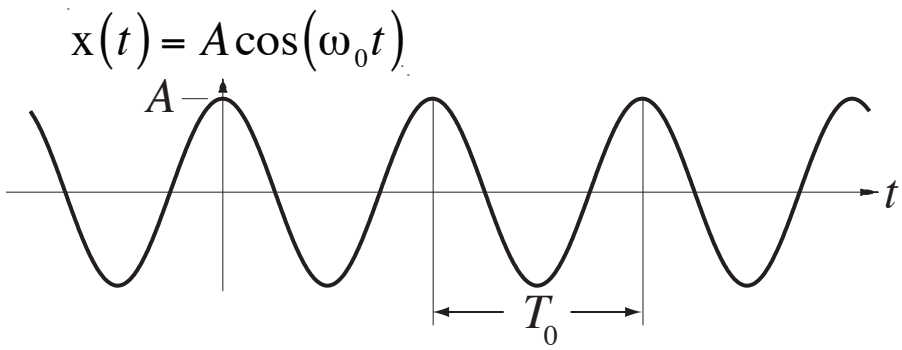

$T_0 = 1/f_0 = 2\pi/\omega_0$

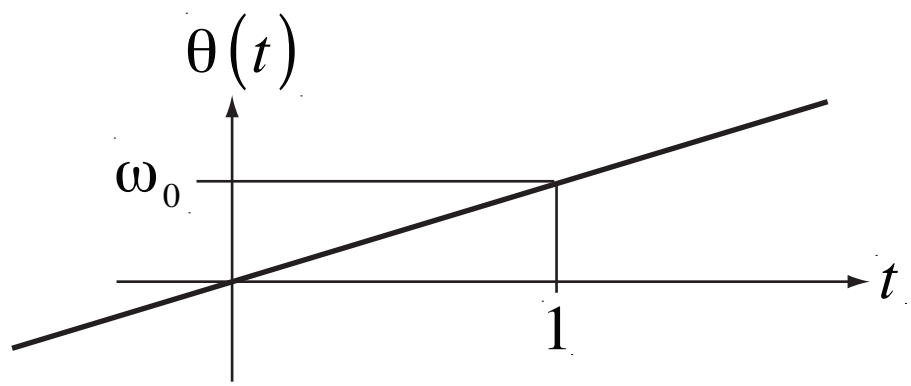

Phase and Frequency

Let $\mathrm{x}(t) = A\cos(\theta(t))$ and let $\theta(t) = \omega_0 t\,\mathrm{u}(t) = \omega_0\,\mathrm{ramp}(t)$. Then the frequency is $\frac{d}{dt}\theta(t) = \omega_0\,\mathrm{u}(t)$. Call it **instantaneous radian frequency** $\omega(t)$.

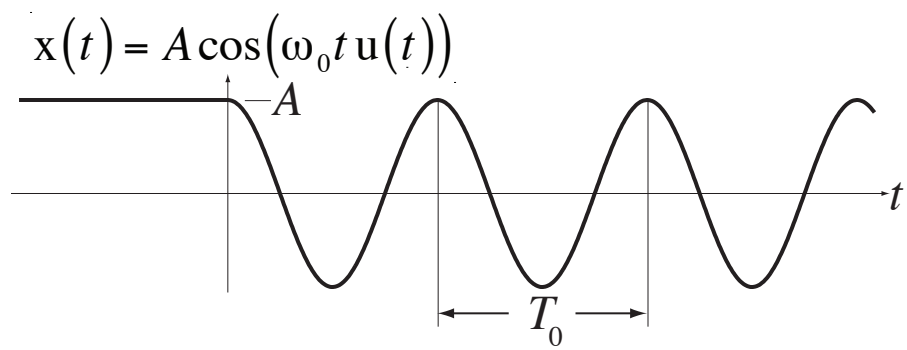

$T_0 = 1/f_0 = 2\pi/\omega_0$

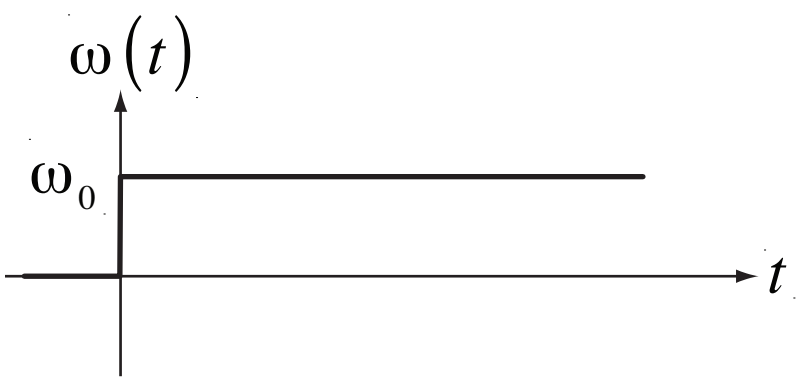

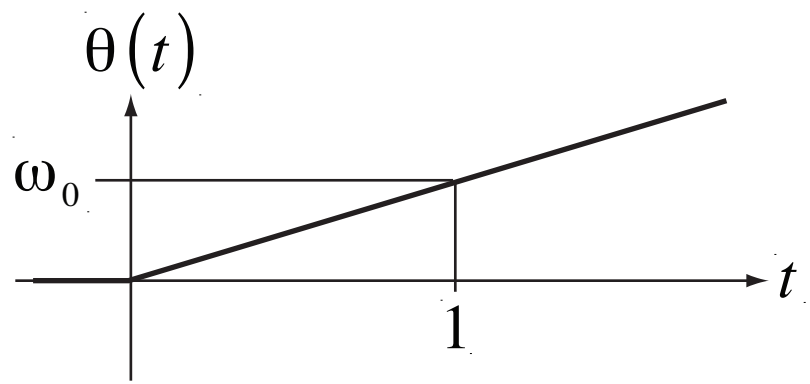

Phase and Frequency

Now let $\mathrm{x}(t) = A\cos\left(2\pi t\left(\mathrm{u}(t) + \mathrm{u}(t-1)\right)\right)$. Then the instantaneous radian frequency is $\omega(t) = 2\pi\left[\mathrm{u}(t) + \mathrm{u}(t-1)\right]$ and the phase is $\theta(t) = 2\pi\left(\mathrm{ramp}(t) + \mathrm{ramp}(t-1)\right)$.

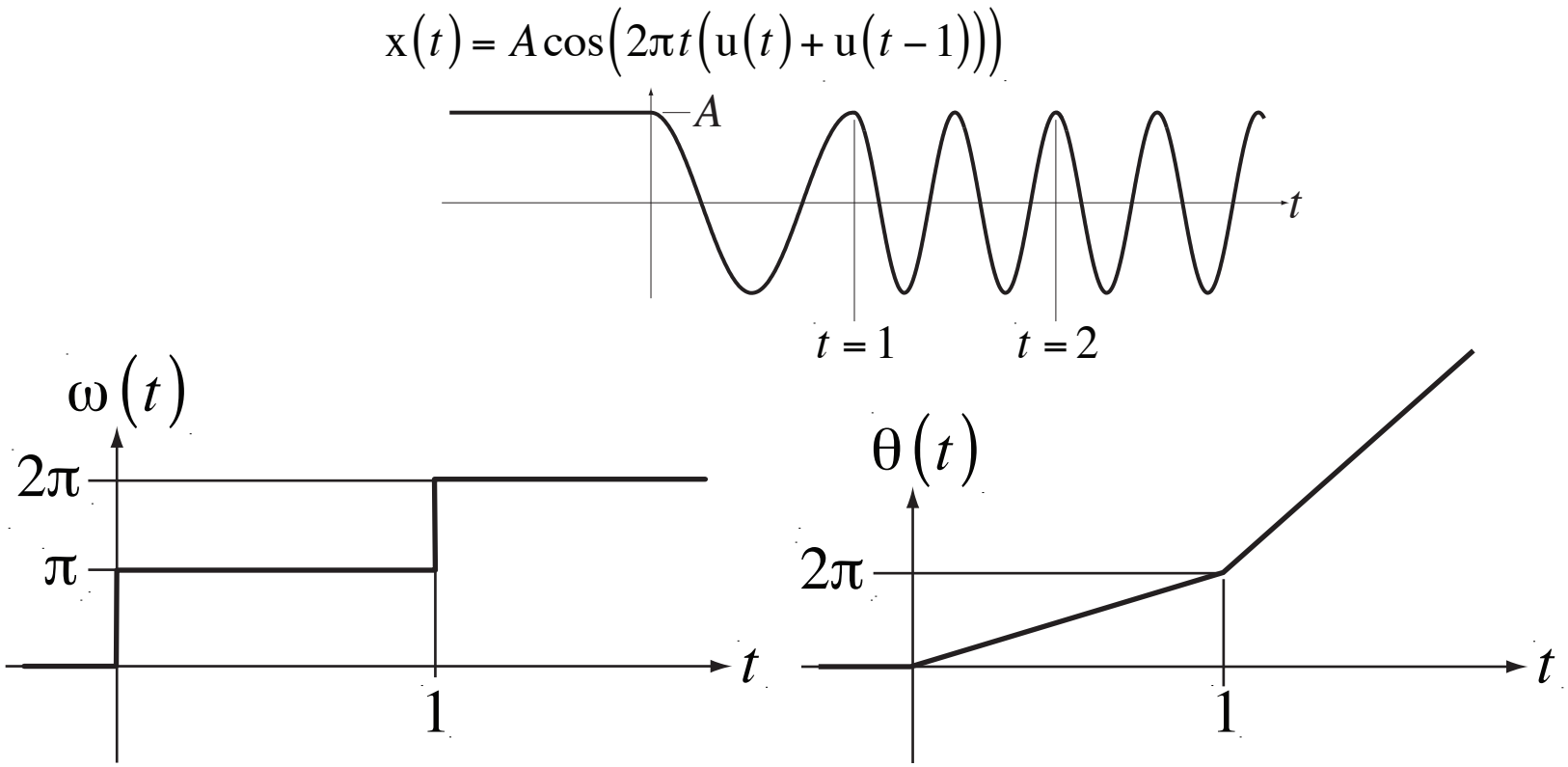

Phase Discrimination

Let $x_1(t) = A_1 \sin(\omega_0 t)$ and let $x_2(t) = A_2 \cos(\omega_0 t - \phi)$.

The product is $x_1(t)x_2(t) = A_1 A_2 \sin(\omega_0 t)\cos(\omega_0 t - \phi)$.

Using a trigonometric identity,

$$x_1(t)x_2(t) = \frac{A_1 A_2}{2}\left[\sin(\phi) + \sin(2\omega_0 t - \phi)\right]$$

and

$$\langle x_1(t)x_2(t)\rangle = \frac{A_1 A_2}{2}\sin(\phi)$$

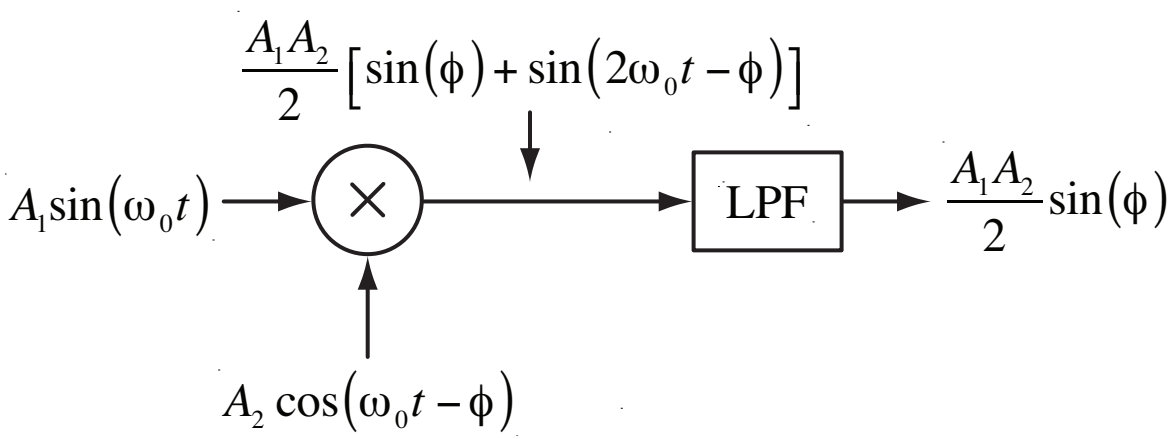

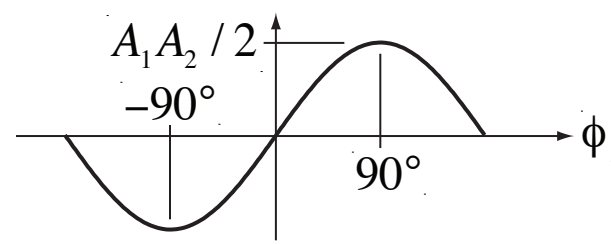

Voltage-Controlled Oscillators

A **voltage - controlled oscillator** (**VCO**) is a device that accepts an analog voltage as its input and produces a periodic waveform whose fundamental frequency depends on that voltage. Another common name for a VCO is "voltage-to-frequency converter". The waveform is typically either a sinusoid or a rectangular wave. A VCO has a free-running frequency f_{v}. When the input analog voltage is zero, the fundamental frequency of the VCO output signal is f_{v}. The output frequency of the VCO is $f_{VCO} = f_{\mathrm{v}} + K_{\mathrm{v}}\, \mathrm{v}_{in}$ where K_{v} is a gain constant with units of Hz/V.

Phase-Locked Loops

A **phase - locked loop** (**PLL**) is a device used to generate a periodic signal with a fixed phase relationship to the carrier in a bandpass signal with CW modulation. An essential ingredient in the locking process is an **analog phase comparator**. A phase comparator produces a signal that depends on the phase difference between two periodic bandpass signals. One system that accomplishes this goal is an analog multiplier followed by a lowpass filter. Let the two bandpass signals be $\mathrm{x}_c(t) = A_c \cos(\theta_c(t))$ and $\mathrm{v}(t) = A_\mathrm{v} \cos(\theta_\mathrm{v}(t))$ and let the output signal from the phase comparator be $\mathrm{y}(t)$. Suppose $\theta_\mathrm{v}(t) = \theta_c(t) - \varepsilon(t) + 90°$.

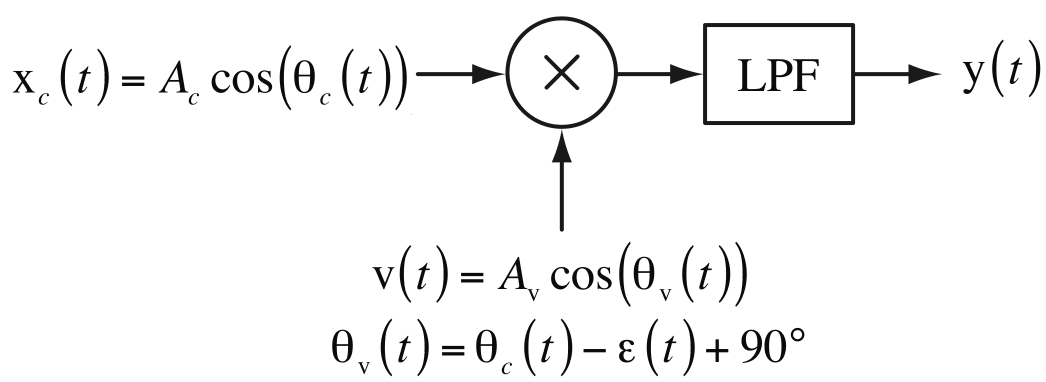

Phase-Locked Loops

The product of the two signals is

$$\mathrm{x}_c(t)\mathrm{v}(t) = A_c \cos(\theta_c(t)) A_\mathrm{v} \cos(\theta_\mathrm{v}(t))$$

$$\mathrm{x}_c(t)\mathrm{v}(t) = (A_c A_\mathrm{v}/2)\left[\cos(\theta_c(t) - \theta_\mathrm{v}(t)) + \cos(\theta_c(t) + \theta_\mathrm{v}(t))\right]$$

The output signal from an ideal lowpass filter would be

$$\mathrm{y}(t) = (A_c A_\mathrm{v}/2)\cos(\theta_c(t) - \theta_\mathrm{v}(t)) = (A_c A_\mathrm{v}/2)\cos(\varepsilon(t) - 90°) = (A_c A_\mathrm{v}/2)\sin(\varepsilon(t))$$

$\varepsilon(t)$ is the **angular error** and, when $\varepsilon(t) = 0$, $\mathrm{y}(t) = 0$ and $\mathrm{x}_c(t)$ and $\mathrm{v}(t)$ are in quadrature (because of the 90° term in $\theta_\mathrm{v}(t)$). For small phase errors $\varepsilon(t)$ the relation between $\mathrm{y}(t)$ and $\varepsilon(t)$ is almost linear.

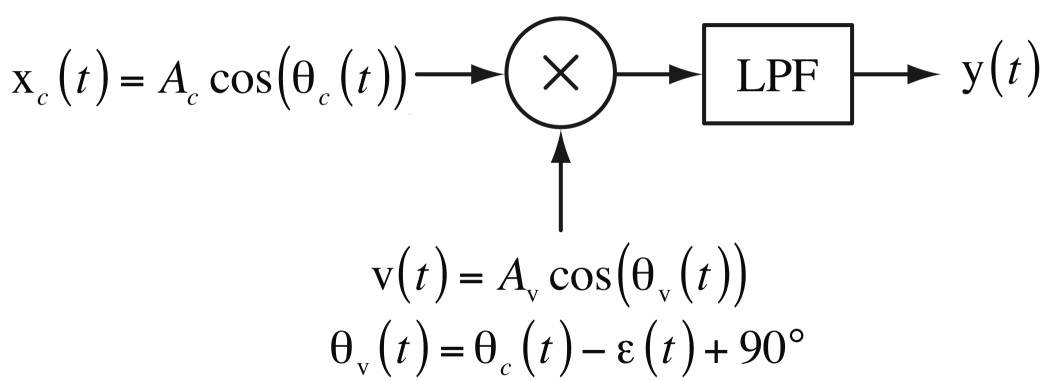

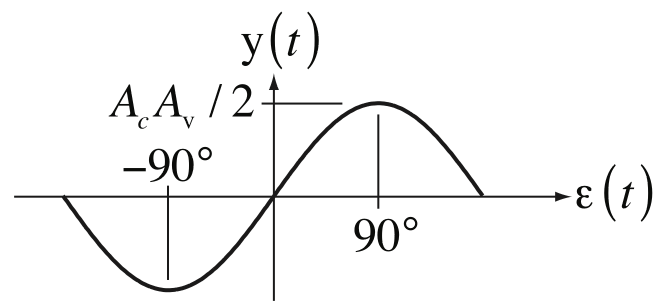

Phase-Locked Loops

$y(t)$ depends on both the phase difference and A_c and A_v. We can make the dependence on the amplitudes go away if we first **hard limit** the signals, turning them into fixed-amplitude square waves. Another benefit of hard-limiting is that the multiplication becomes a switching operation and the error signal $y(t)$ is now a linear function of $\varepsilon(t)$ over a wider range.

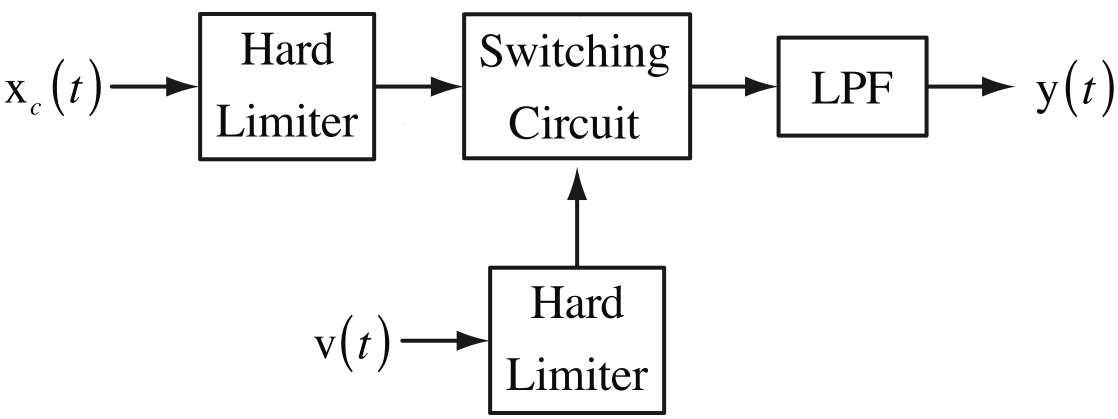

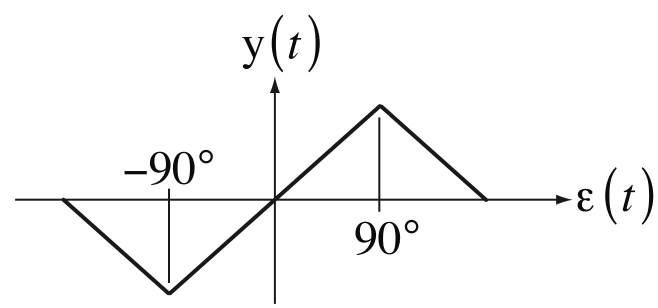

Phase-Locked Loops

To get an understanding of how a PLL locks onto a carrier, let the phase comparator be analog, as in the diagram below, and let the incoming bandpass signal be $\mathrm{x}_c(t) = 2\cos(\theta_c(t))$ where $\theta_c(t) = \omega_c t + \phi(t)$. Also let $\mathrm{v}(t) = \cos(\theta_\mathrm{v}(t))$. Then $\mathrm{y}(t) = K_a \sin(\varepsilon(t))$. The free-running frequency of the VCO is $f_\mathrm{v} = f_c - \Delta f$ and Δf is the **frequency error**. The action of the VCO is to produce the angle $\theta_\mathrm{v}(t) = 2\pi(f_c - \Delta f)t + \phi_\mathrm{v}(t) + 90°$ where $\phi_\mathrm{v}(t) = 2\pi K_\mathrm{v} \int^t \mathrm{y}(\lambda)\, d\lambda$. Then the angular error is

$$\varepsilon(t) = \theta_c(t) - \theta_\mathrm{v}(t) + 90° = 2\pi f_c t + \phi(t) - \left[2\pi(f_c - \Delta f)t + \phi_\mathrm{v}(t) + 90°\right] + 90°$$

$$\varepsilon(t) = \theta_c(t) - \theta_\mathrm{v}(t) + 90° = 2\pi \Delta f t + \phi(t) - \phi_\mathrm{v}(t)$$

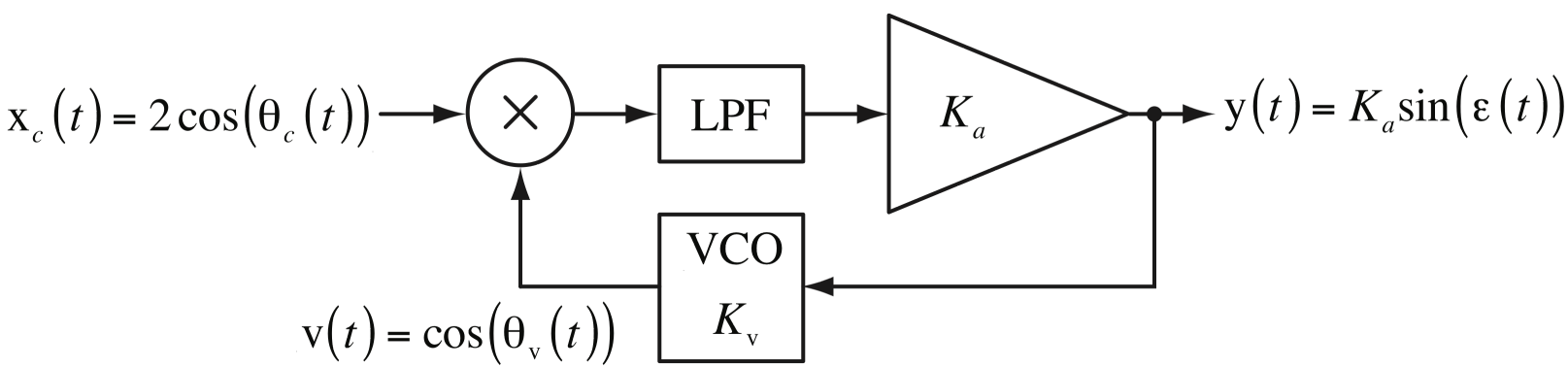

Phase-Locked Loops

From the previous slide

$$\varepsilon(t) = \theta_c(t) - \theta_{\mathrm{v}}(t) + 90° = 2\pi\Delta f t + \phi(t) - \underbrace{\phi_{\mathrm{v}}(t)}_{2\pi K_{\mathrm{v}} \int^{t} \mathrm{y}(\lambda)\, d\lambda}$$

Differentiating with respect to time,

$$\dot{\varepsilon}(t) = 2\pi\Delta f + \dot{\phi}(t) - 2\pi K_{\mathrm{v}} \underbrace{\mathrm{y}(t)}_{K_a \sin(\varepsilon(t))}$$

$$\dot{\varepsilon}(t) + 2\pi K_{\mathrm{v}} K_a \sin(\varepsilon(t)) = 2\pi\Delta f + \dot{\phi}(t)$$

Let $K_{\mathrm{v}} K_a = K$, the **loop gain**. Then

$$\dot{\varepsilon}(t) + 2\pi K \sin(\varepsilon(t)) = 2\pi\Delta f + \dot{\phi}(t)$$

This is a non-linear differential equation and cannot be solved in general for an arbitrary $\phi(t)$. But consider the special case of $\phi(t) = \phi_0$, a constant. Then $\dot{\phi}(t) = 0$ and $\dfrac{\dot{\varepsilon}(t)}{2\pi K} + \sin(\varepsilon(t)) = \Delta f / K$. When the loop is locked, $\varepsilon(t)$ is a constant ε_{ss}, $\dot{\varepsilon}(t) = 0$, $\varepsilon_{ss} = \sin^{-1}(\Delta f / K)$ and $\mathrm{y}(t) = \mathrm{y}_{ss} = K_a \sin\left(\sin^{-1}(\Delta f / K)\right) = \Delta f / K_{\mathrm{v}}$

Phase-Locked Loops

In steady state, $\mathrm{y}(t) = \mathrm{y}_{ss} = \Delta f / K_{\mathrm{v}}$ and $\mathrm{v}_{ss}(t) = \cos(\omega_c t + \phi_0 - \varepsilon_{ss} + 90°)$. The steady-state angular error $\varepsilon_{ss} = \sin^{-1}(\Delta f / K)$ will be small if the loop gain K is big. When $|\Delta f / K| > 1$, the differential equation

$$\frac{\dot{\varepsilon}(t)}{2\pi K} + \sin(\varepsilon(t)) = \Delta f / K$$

does not have a steady-state solution because there is no real-valued solution of $\varepsilon_{ss} = \sin^{-1}(\Delta f / K)$. Therefore a lock-in condition is that $|\Delta f / K| \le 1$. At lock-in when ε_{ss} is small the differential equation becomes $\frac{\dot{\varepsilon}(t)}{2\pi K} + \varepsilon(t) \cong \Delta f / K$, a linear first-order equation with the well-known solution form $\varepsilon(t) = \varepsilon(t_0) e^{-2\pi K(t - t_0)}$, $t \ge t_0$. So the response of the PLL to sudden changes in input frequency is to approach steady state on a time constant of $\frac{1}{2\pi K}$.

Phase-Locked Loop States

Input and Feedback Signals at Same Frequency

Locked in Quadrature

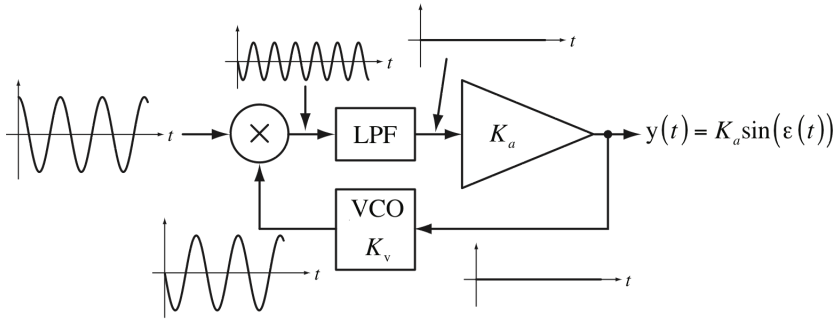

Not Locked - Input and Feedback Signals in Phase

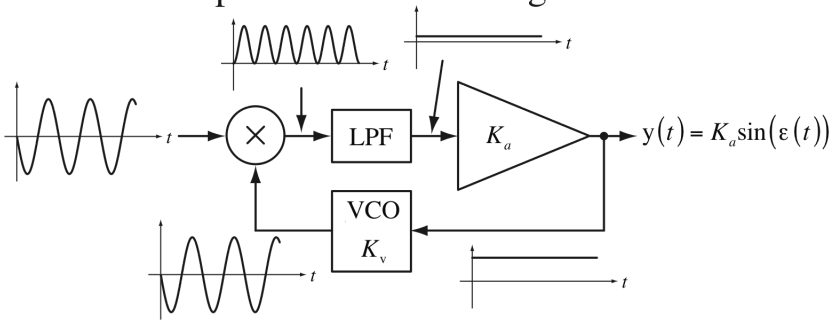

Not Locked - Input and Feedback Signals 180° Out of Phase

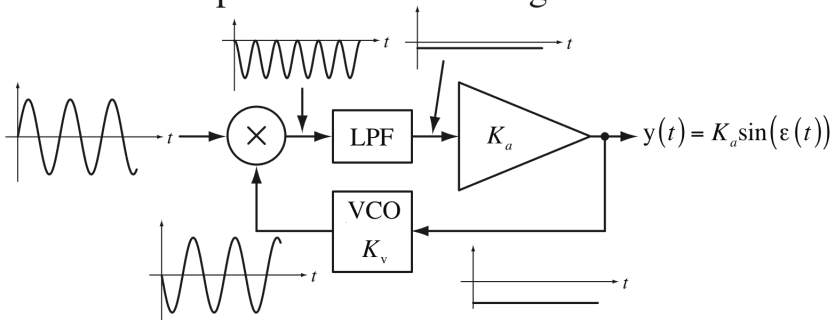

Phase-Locked Loop States

Input and Feedback Signals at Different Frequencies

Input Frequency > Feedback Frequency

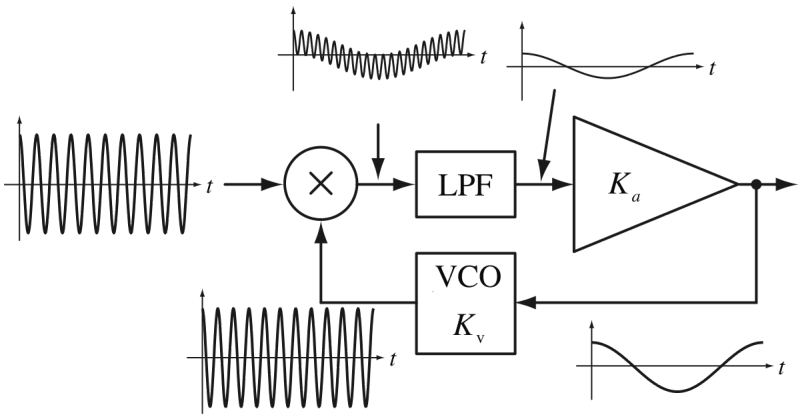

Input Frequency < Feedback Frequency

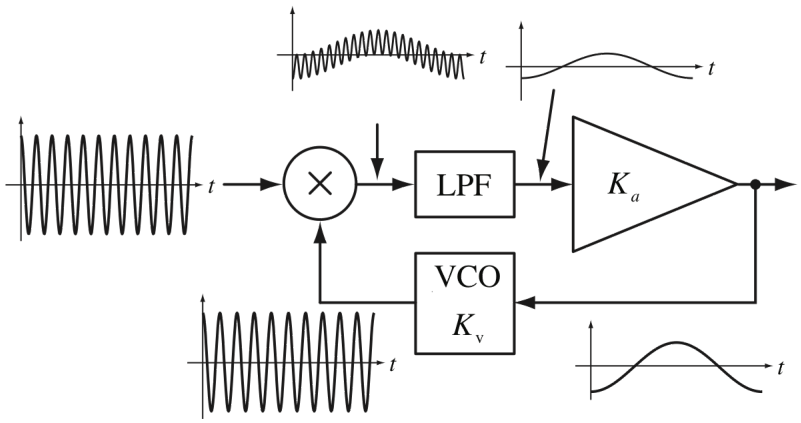

Phase-Locked Loops

If the phase error of a PLL is small, the PLL can be modeled as a linear feedback system. The phase of the VCO output signal is

$\phi_{\mathrm{v}}(t) = 2\pi K_{\mathrm{v}} \int^{t} \mathrm{y}(\lambda)\, d\lambda$. In the complex frequency (s) domain this

becomes $\Phi_{\mathrm{v}}(s) = 2\pi K_{\mathrm{v}}\, \mathrm{Y}(s)/s$.

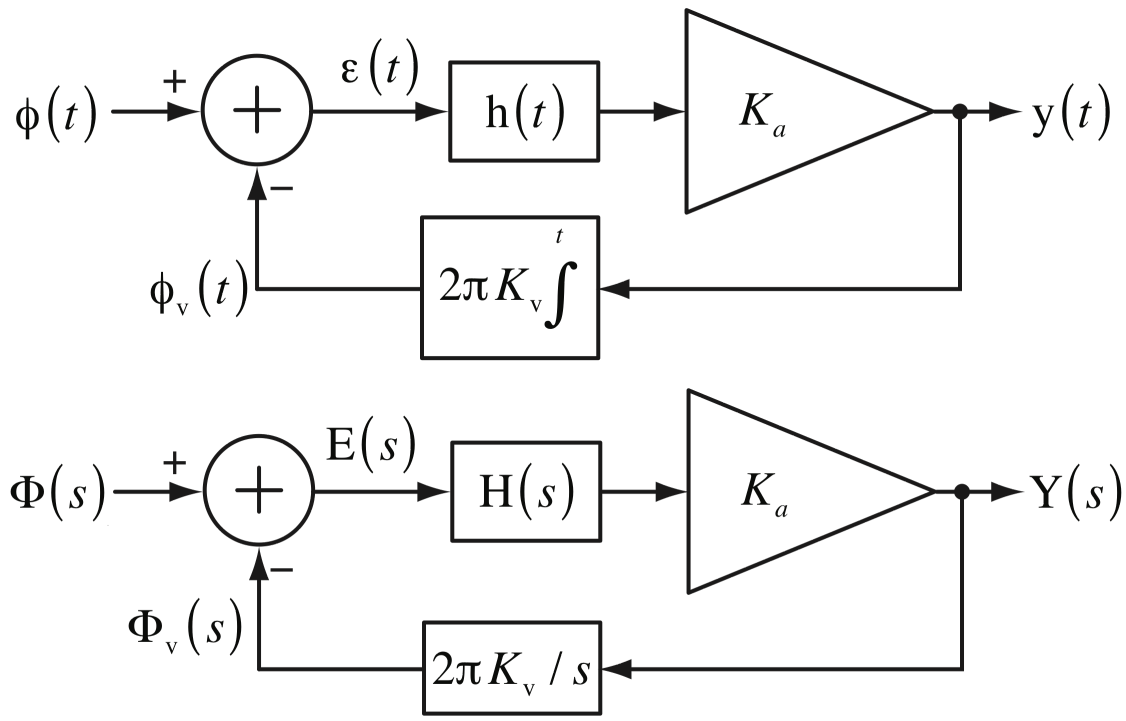

Phase-Locked Loops

$$\mathrm{E}(s) = \Phi(s) - \Phi_{\mathrm{v}}(s) \quad \text{and} \quad \Phi_{\mathrm{v}}(s) = \mathrm{E}(s)\mathrm{H}(s)K_a 2\pi K_{\mathrm{v}} / s$$

Combining equations $\mathrm{E}(s) = \Phi(s) - \mathrm{E}(s)\mathrm{H}(s)K_a 2\pi K_{\mathrm{v}} / s$

$$\mathrm{E}(s) + \mathrm{E}(s)\mathrm{H}(s)K_a 2\pi K_{\mathrm{v}} / s = \Phi(s)$$

$$\frac{\mathrm{E}(s)}{\Phi(s)} = \frac{1}{1 + \mathrm{H}(s)K_a 2\pi K_{\mathrm{v}} / s} = \frac{s}{s + \mathrm{H}(s)K_a 2\pi K_{\mathrm{v}}}$$

$$\frac{\mathrm{Y}(s)}{\Phi(s)} = K_a \mathrm{H}(s)\frac{\mathrm{E}(s)}{\Phi(s)} = \frac{sK_a \mathrm{H}(s)}{s + \mathrm{H}(s)K_a 2\pi K_{\mathrm{v}}}$$

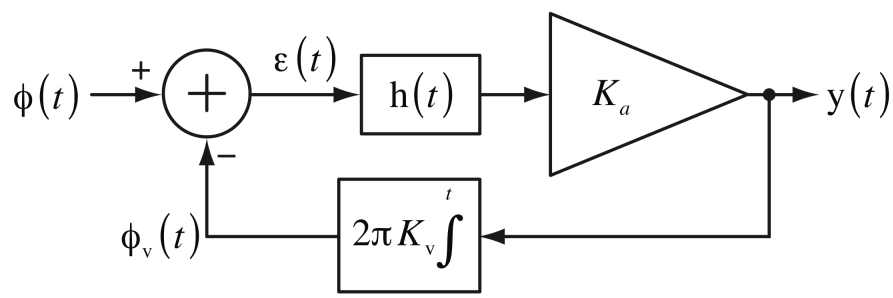

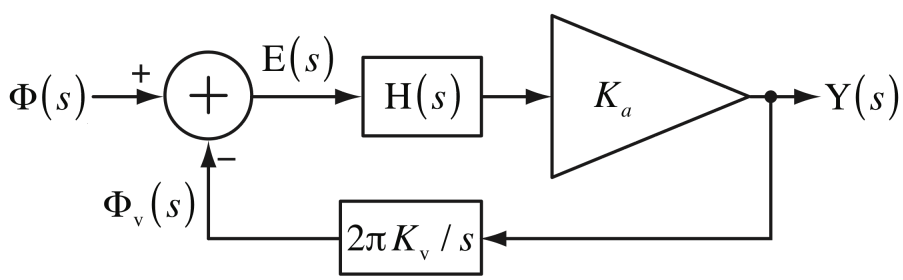

Phase-Locked Loops

The locations of the poles depend on the nature of the lowpass filter transfer function $\mathrm{H}(s)$. For example, let $\mathrm{H}(s) = \dfrac{1}{s+a}$. Then

$$\frac{\mathrm{Y}(s)}{\Phi(s)} = \frac{\dfrac{sK_a}{s+a}}{s + \dfrac{2\pi K_a K_{\mathrm{v}}}{s+a}} = \frac{sK_a}{s^2 + as + 2\pi K_a K_{\mathrm{v}}}$$

The poles are at $s = \dfrac{-a \pm \sqrt{a^2 - 8\pi K_a K_{\mathrm{v}}}}{2}$. If the real part of every pole is negative, the system is stable. For any positive value of a this linearized system is absolutely stable, although it could have a large overshoot and ringing in response to a step change in input signal phase.

Phase-Locked Loops

$$\frac{\mathrm{Y}(s)}{\Phi(s)} = \frac{sK_a \mathrm{H}(s)}{s + 2\pi K_a K_\mathrm{v} \mathrm{H}(s)}$$

Now, let $\mathrm{H}(s) = \dfrac{1}{s^2 + a_1 s + a_0}$, a second-order lowpass filter. Then

$$\frac{\mathrm{Y}(s)}{\Phi(s)} = \frac{\dfrac{sK_a}{s^2 + a_1 s + a_0}}{s + \dfrac{2\pi K_a K_\mathrm{v}}{s^2 + a_1 s + a_0}} = \frac{sK_a}{s^3 + a_1 s^2 + a_0 s + 2\pi K_a K_\mathrm{v}}$$

The loop transfer function is $\mathrm{T}(s) = \dfrac{2\pi K_a K_\mathrm{v}}{s\left(s^2 + a_1 s + a_0\right)}$ with a pole at $s = 0$ and two more poles at $s = \dfrac{-a_1 \pm \sqrt{a_1^2 - 4a_0}}{2}$ and no finite zeros. A root locus would show that this system will become unstable at some finite value of $2\pi K_a K_\mathrm{v}$.

Phase-Locked Loops

Example: Let $f_c = 1\text{ MHz}, f_\text{v} = 998\text{ kHz},\ K_a = 1\text{ V/V},\ K_\text{v} = 5000\text{ Hz/V}$

and $\text{H}(s) = \dfrac{10^4}{s+10^4}$. Let the PLL be initially locked. That means that initally

$\text{y}(t) = \dfrac{\Delta f}{K_\text{v}} = \dfrac{2000\text{ Hz}}{5000\text{ Hz/V}} = 0.4\text{ V}.$

$$\frac{\text{Y}(s)}{\Phi(s)} = \frac{sK_a\text{H}(s)}{s+2\pi K_a K_\text{v}\text{H}(s)} = \frac{s\dfrac{10^4}{s+10^4}}{s+2\pi\times 5000\dfrac{10^4}{s+10^4}} = \frac{10^4 s}{s^2+10^4 s+10\pi\times 10^7}$$

So the system has poles at $s = -5000 \pm j17004.6$. It is stable but will have appreciable overshoot and ringing in response to a step change in the phase of the input signal.

Phase-Locked Loops

Example: Let $f_c = 2$ MHz, $f_\mathrm{v} = 2$ MHz, $K_a = 1$ V/V, $K_\mathrm{v} = 1.3$ MHz/V

and $\mathrm{H}(s) = \dfrac{0.1775s + 500}{s}$. Let the PLL be initially locked.

That means that initally $\mathrm{y}(t) = \Delta f / K_\mathrm{v} = 0$.

$$\frac{\mathrm{Y}(s)}{\Phi(s)} = \frac{s\dfrac{0.1775s + 500}{s}}{s + 10000\pi\dfrac{0.1775s + 500}{s}} = \frac{s(0.1775s + 500)}{s^2 + 5576s + 1.57 \times 10^7}$$

The system has poles at $s = -2788 \pm j2815.5$ and should be stable.

Phase-Locked Loops

Example: $\dfrac{\mathrm{Y}(s)}{\Phi(s)} = \dfrac{s(0.1775s + 500)}{s^2 + 5576s + 1.57 \times 10^7}$

Let the PLL be locked at time $t = 0$ with $\phi(0^-) = 0$. Now let the phase shift of the incoming signal suddenly change from 0 to 1 radian, $\phi(t) = \mathrm{u}(t)$. How does the output voltage $\mathrm{y}(t)$ respond? $\Phi(s) = 1/s$ and

$$\frac{\mathrm{Y}(s)}{1/s} = \frac{s(0.1775s + 500)}{s^2 + 5576s + 1.57 \times 10^7}$$

$$\mathrm{Y}(s) = \frac{0.1775s + 500}{s^2 + 5576s + 1.57 \times 10^7}$$

$$\mathrm{y}(t) = \left[0.1775e^{-2788t}\cos(2815.5t - 0.0103)\right]\mathrm{u}(t)$$

Phase-Locked Loops

$$y(t) = \left[0.1775e^{-2788t}\cos(2815.5t - 0.0103)\right]u(t)$$

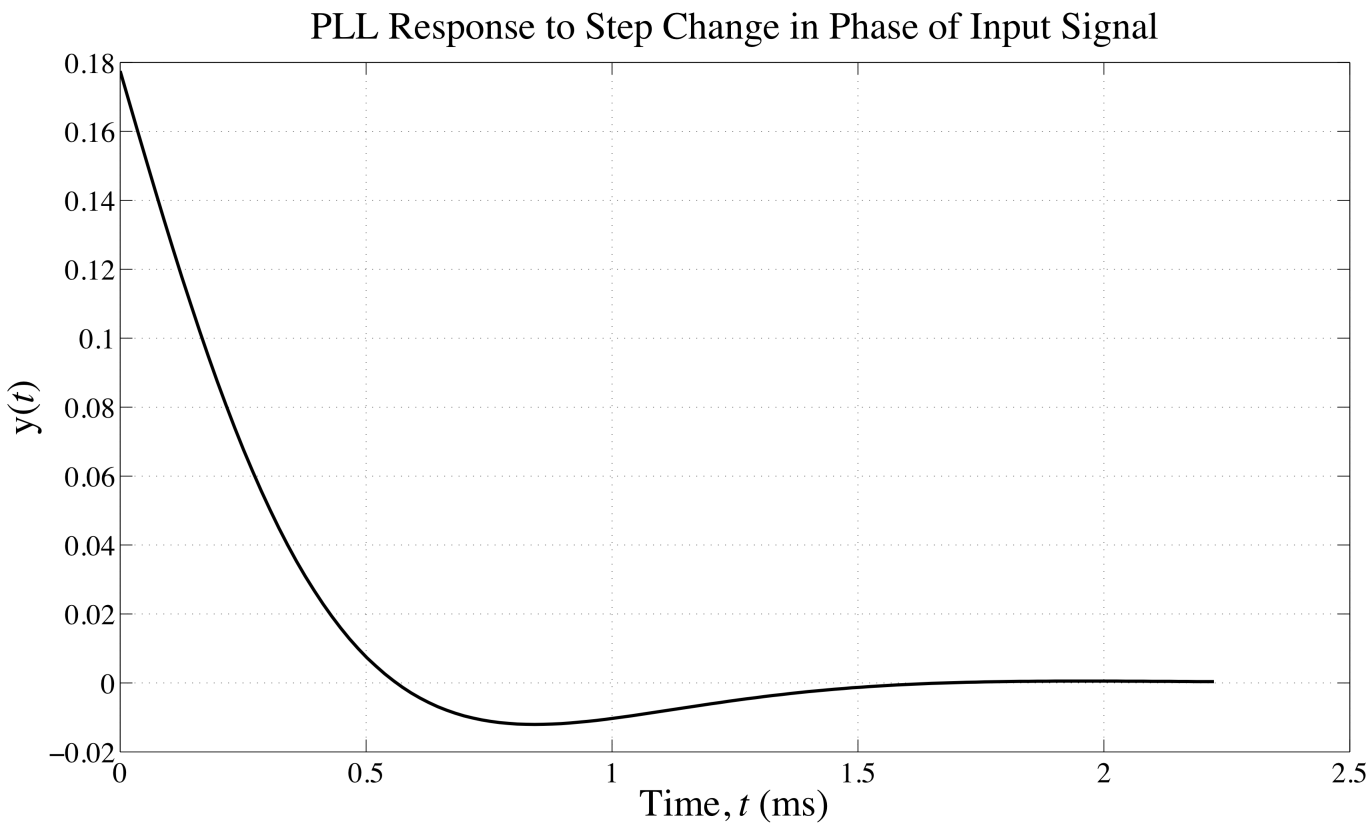

Phase-Locked Loops

Example: $\dfrac{\mathrm{Y}(s)}{\Phi(s)} = \dfrac{s(0.1775s + 500)}{s^2 + 5576s + 1.57 \times 10^7}$

Let the PLL be locked at time $t = 0$ with $\phi(0^-) = 0$. Now let the frequency of the incoming signal suddenly change from 2 MHz to 2.001 MHz. How does the output voltage $\mathrm{y}(t)$ respond? The phase of the incoming signal was $\omega_c t + \underbrace{\phi(t)}_{=0} = 4 \times 10^6 \pi t$ and now changes to

$$4 \times 10^6 \pi t + \phi(t) = 4.002 \times 10^6 \pi t \Rightarrow \phi(t) = 2000\pi t \Rightarrow \Phi(f) = 2000\pi / s^2$$

$$\frac{\mathrm{Y}(s)}{2000\pi / s^2} = \frac{s(0.1775s + 500)}{s^2 + 5576s + 1.57 \times 10^7}$$

$$\mathrm{Y}(s) = \frac{2000\pi(0.1775s + 500)}{s\left(s^2 + 5576s + 1.57 \times 10^7\right)} = \frac{1115.3s + 3.1416 \times 10^6}{s\left(s^2 + 5576s + 1.57 \times 10^7\right)}$$

$$\mathrm{y}(t) = \left[0.2 + 0.28149e^{-2788t}\cos(2815.5t - 2.362)\right]\mathrm{u}(t)$$

Phase-Locked Loops

$$y(t) = \left[0.2 + 0.28149e^{-2788t}\cos(2815.5t - 2.362)\right]u(t)$$

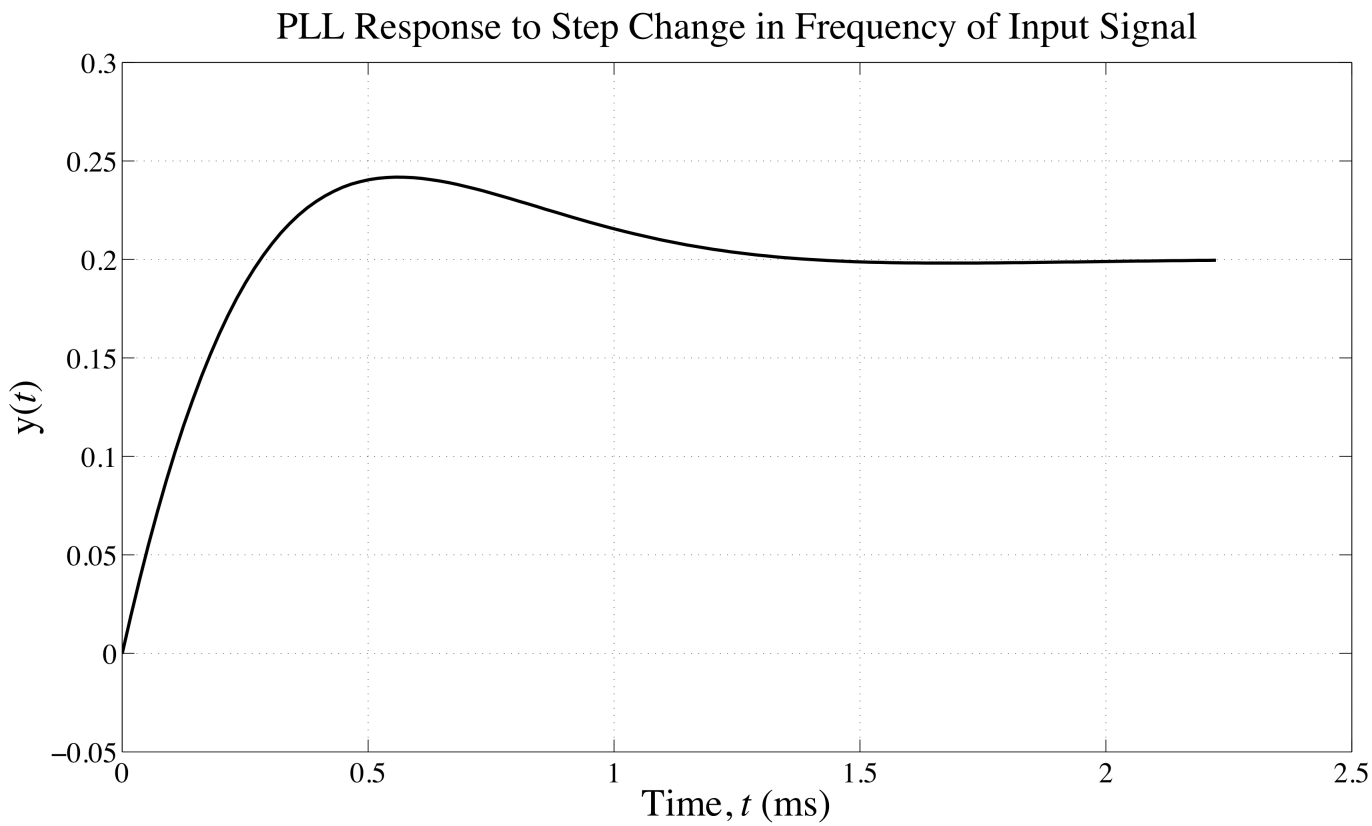

Phase-Locked Loops

For DSB signals, which do not have transmitted carriers, Costas invented a system to synchronize a local oscillator and also do synchronous detection. The incoming signal is $x_c(t) = x(t)\cos(\omega_c t)$ with bandwidth $2W$. It is applied to two phase discriminators, main and quad, each consisting of a multiplier followed by a LPF and an amplifier. The local oscillators that drive them are 90° out of phase so that the output signal from the main phase discriminator is $x(t)\sin(\varepsilon_{ss})$ and the output signal from the quad phase discriminator is $x(t)\cos(\varepsilon_{ss})$.

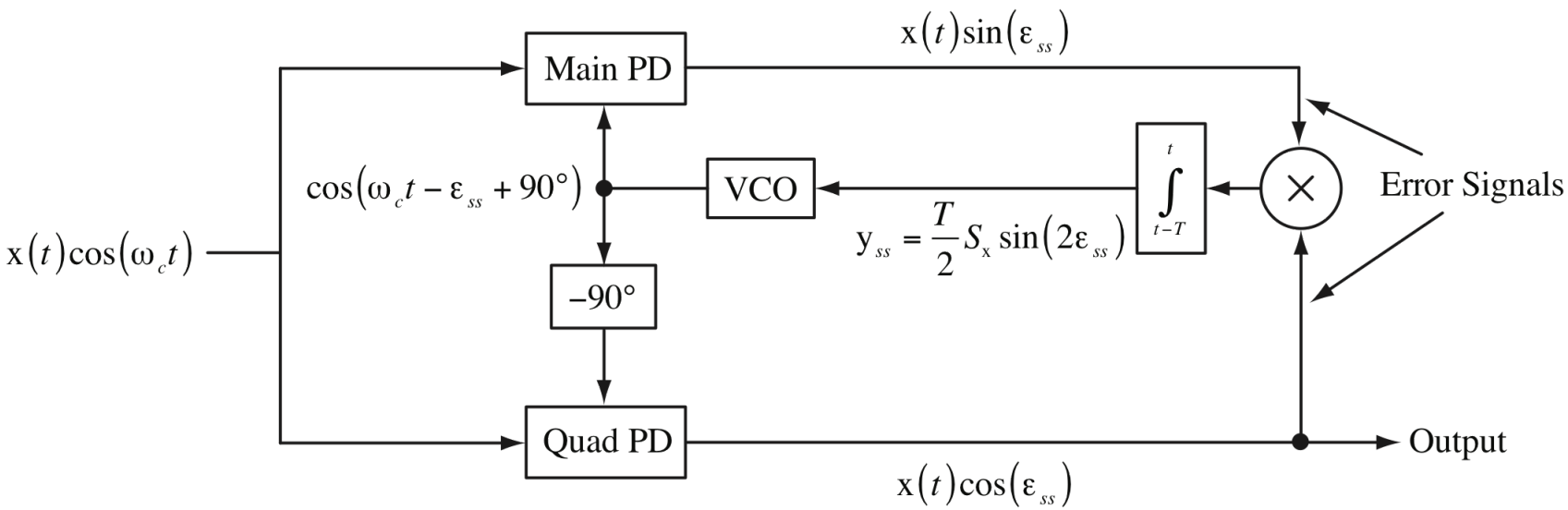

Phase-Locked Loops

The VCO control voltage y_{ss} is the time average of the product of $x(t)\sin(\varepsilon_{ss})$ and $x(t)\cos(\varepsilon_{ss})$ or $y_{ss} = \int_{t-T}^{t} x^2(\lambda)\cos(\varepsilon_{ss})\sin(\varepsilon_{ss})d\lambda$ which is $y_{ss} = \frac{T}{2}\left\langle x^2(t)\left[\sin(0)+\sin(2\varepsilon_{ss})\right]\right\rangle = \frac{T}{2}S_x \sin(2\varepsilon_{ss})$. When the angular error ε_{ss} is zero, y_{ss} does not change with time, the loop is locked and the output signal from the quad phase discriminator is $x(t)\cos(\varepsilon_{ss}) = x(t)$ because $\varepsilon_{ss} = 0$.