Laboratory – 2

Complete Circuit Response Using Laplace Transforms

Objectives

The objectives of this laboratory are

- to apply Laplace transform methods to finding the response of a second-order bandpass filter in both the time and frequency domains

Analysis Using Laplace Transforms

Any linear circuit can be analyzed using Laplace transforms. In this laboratory we will find the response of a second-order bandpass filter to a step excitation and also its frequency response. The circuit is shown in Fig. 6.1.

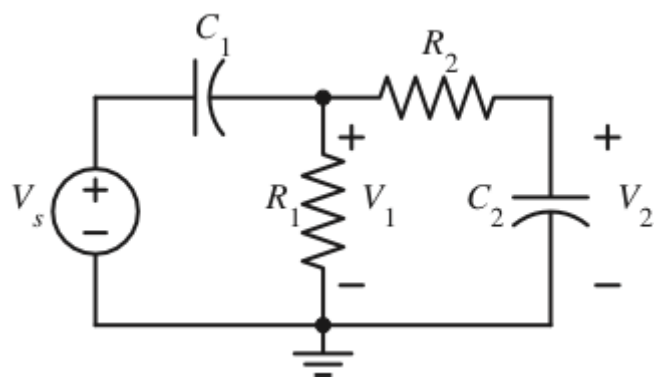

Figure 6.1 Second-order bandpass filter

PreLab

Complete the following exercises prior to coming to the lab. As usual, turn-in your prelab work to the lab instructor before starting the Laboratory Exercises.

1. Write and solve nodal equations for $\mathrm{H}_1(s)=\dfrac{\mathrm{V}_1(s)}{\mathrm{V}_s(s)}$ and $\mathrm{H}_2(s)=\dfrac{\mathrm{V}_2(s)}{\mathrm{V}_s(s)}$ in the s domain in terms of the symbolic parameters C_1, R_1, C_2 and R_2. Both transfer functions must have a second-degree polynomial in s in the denominator. Express each transfer function in one of the standard forms below (in which A, a_1, a_0, b_1 and b_0 are all real constants).

$$\mathrm{H}(s)=A\frac{s^2+b_1s+b_0}{s^2+a_1s+a_0} \quad \text{or} \quad \mathrm{H}(s)=A\frac{s+b_0}{s^2+a_1s+a_0} \quad \text{or} \quad \mathrm{H}(s)=A\frac{1}{s^2+a_1s+a_0}$$

These two transfer functions are ratios of voltages. Therefore they should be dimensionless overall (V/V). As a check on your work, be sure that a_1 has units of s^{-1} and that a_0 has units of s^{-2}. Similarly b_1 (if it is not zero) should have units of s^{-1} and b_0 (if it is not zero) should have units of s^{-2}. In the form $\mathrm{H}(s) = A\dfrac{s^2 + b_1 s + b_0}{s^2 + a_1 s + a_0}$, A should be dimensionless. In the form $\mathrm{H}(s) = A\dfrac{s + b_0}{s^2 + a_1 s + a_0}$, A should have units of s^{-1}. In the form $\mathrm{H}(s) = A\dfrac{1}{s^2 + a_1 s + a_0}$, A should have units of s^{-2}.

2. Let $C_1 = 1\mu\mathrm{F}$, $C_2 = 0.22\mu\mathrm{F}$, $R_1 = 4.7\mathrm{k}\Omega$ and $R_2 = 1.5\mathrm{k}\Omega$. Substitute in these numerical values for the capacitors and resistors and find numerical expressions for $\mathrm{H}_1(s)$ and $\mathrm{H}_2(s)$.

3. Let the voltage source V_s be a unit step function, $\mathrm{v}_s(t) = \mathrm{u}(t) \Rightarrow \mathrm{V}_s(s) = \dfrac{1}{s}$.

4. Find numerical expressions for the two frequency-domain voltages $\mathrm{V}_1(s)$ and $\mathrm{V}_2(s)$.

5. Find numerical expressions for the two time-domain voltages $\mathrm{v}_1(t)$ and $\mathrm{v}_2(t)$ by inverse Laplace transforming the expressions in step 4.

6. Graph the two time-domain voltages found in step 5. As a check on your computations, your graph should look like this.

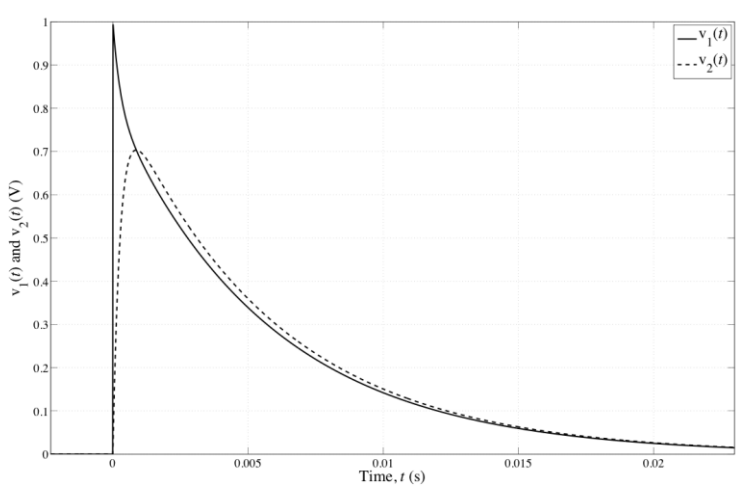

Figure 6.2 Step response of the bandpass filter

7. In the expressions for $\mathrm{H}_1(s)$ and $\mathrm{H}_2(s)$, let $s \to j\omega$ and write expressions for $\mathrm{H}_1(j\omega)$ and $\mathrm{H}_2(j\omega)$.

8. Bode plot the magnitudes and phases of $\mathrm{H}_1(j\omega)$ and $\mathrm{H}_2(j\omega)$ versus ω over the range $1 \le \omega \le 100{,}000$

9. In the lab we will try to determine, as accurately as possible, the actual, as opposed to the nominal, values of the resistors and capacitors in Figure 6.1. First we will measure the actual resistance values using the multimeter. Then we will use a circuit like Figure 6.4 to accurately determine the values of the two capacitances.

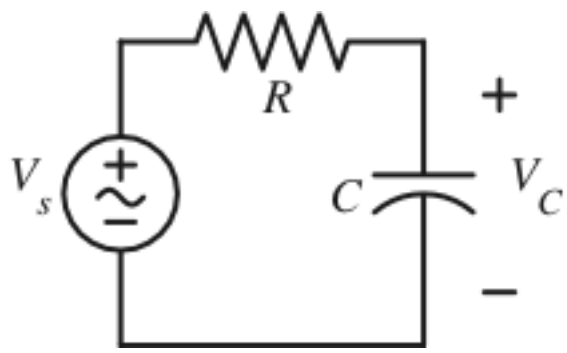

Figure 6.4 A test circuit for determining a capacitance value

10. Let $\mathrm{H}(s) = \dfrac{V_C(s)}{V_s(s)} = \dfrac{1}{sRC+1}$ be the transfer function of this circuit. Then the frequency response is $\mathrm{H}(j\omega) = \dfrac{1}{j\omega RC+1}$. When $\omega RC = 1$ the phase of $\mathrm{H}(j\omega)$ will be $-45°$. So, knowing R and ω we can find the value of C as $C = \dfrac{1}{\omega R}$.

Laboratory Work

1. The nominal values of C_1 and C_2 are $1\mu\mathrm{F}$ and $0.22\mu\mathrm{F}$ and the nominal values of R_1 and R_2 are $4.7\mathrm{k}\Omega$ and $1.5\mathrm{k}\Omega$. But these values have a tolerance, so the actual values may differ somewhat from the nominal values. Measure the resistances of the two resistors with the digital multimeter and record the values.

2. Form the circuit below using a signal generator as a sinusoidal voltage source with R_1 and C_1.

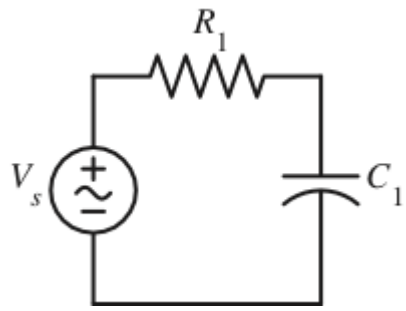

Figure 6.5 Test circuit for measuring C_1

3. Monitor the voltages across the function generator and across C_1 with the oscilloscope and adjust the frequency until the phase shift between those two voltages is 45° (one-eighth of a period).

4. Record the amplitudes of the function generator voltage and the voltage across C_1. Then calculate the actual value of C_1 from the data.

5. Repeat steps 2 through 4 using C_2 instead of C_1.

6. Connect the circuit in Figure 6.1 using the numerical values determined in steps 1 through 4.

7. Record the step response of the circuit at V_1 and V_2. This can be done by suddenly connecting a 1V source as V_s and watching the resulting time-domain circuit response. But a better way is to set the function generator to generate a square wave and set the period of the square wave to be much larger than the largest time constant in the circuit. Set the lower voltage of the square wave to zero and the upper voltage of the square wave to 1 V. Now the source voltage is not one step, but rather a periodic sequence of steps. This will repeatedly generate the step response of the circuit. The exact period of the square wave is not important. Just adjust it until the step response has effectively decayed to zero before the square wave returns to zero. Print out and report in the lab report this step response.

8. Now set the function generator to generate a sinusoid. Measure the frequency and amplitude of V_s and the amplitudes and phases (relative to V_s) of V_1 and V_2 at a sequence of frequencies that covers the radian frequency range $1 \le \omega \le 100,000$. Remember, the function generator generates a cyclic frequency and radian frequency is 2π times the cyclic frequency. Draw a frequency response graph and submit is as part of the lab report.

Questions and Discussions

1. Compare the computed step responses using the nominal resistance and capacitance values and using the measured resistance and capacitance values. Submit graphs of the two computed step responses.

2. Compare the computed step responses and the measured step responses. Discuss possible causes of any differences. Submit graphs of the computed and measured step responses.

3. Compare the computed and measured frequency response magnitudes and phases. Submit graphs of computed and measured frequency response magnitudes and phases.

Before Leaving the Laboratory

Be sure the following is completed before you leave the laboratory.

(a) Check to be sure that you have all the required measured values.

(b) Have the laboratory instructor check your laboratory readings.

(c) Restore your laboratory station (equipment and chairs) to the condition they were in when you arrived. Remove any debris from the work area and floor.

Thank you for your cooperation.

Laboratory Report

The following should be included in your laboratory report. If you have any questions be sure to contact the lab instructor.

(a) Give a short (100 words) summary of what is to be accomplished in the lab exercise.

(b) Tabulate all the readings you obtained in the lab exercise.

(c) Present all oscilloscope printouts neatly labeled.

(d) Write a brief conclusion (approximately 200 words)

(e) Attach the graded prelab at the end of your report.

References

Engineering Circuit Analysis; pp 550, Hayt, W. H.; Kemmerly, J. E.; Durbin, S. M.; 8th Edition; McGraw-Hill Book Company, 2012

Fundamentals of Electric Circuits, pp 633, Alexander, C. K.; Sadiku, M.N.O.; 2nd Edition, McGraw-Hill Book Company, 2003.