Available at
www.ElsevierMathematics.com
POWERED BY SCIENCE DIRECT

Mathematics and Computers in Simulation 63 (2003) 197–208

MATHEMATICS AND COMPUTERS IN SIMULATION
www.elsevier.com/locate/matcom

Real-time computer control of a multilevel converter using the mathematical theory of resultants

John Chiasson*, Leon Tolbert, Keith McKenzie, Zhong Du

Electrical and Computer Engineering Department, The University of Tennessee, Knoxville, TN 37996, USA

Abstract

The mathematical theory of resultants is used to compute the switching angles in a multilevel converter so that it produces the required fundamental voltage while at the same time cancels out unwanted order harmonics. Experimental results are given for the three dc source case. It is shown that for a range of the modulation index the switching angles can be chosen to produce the desired fundamental while at the same time the fifth and seventh harmonics are identically zero.

Keywords: Multilevel inverter; Multilevel converter; Resultants; Dual processors; Real-time; Cascade inverter

1. Introduction

A multilevel converter is a power electronic system that synthesizes a desired voltage output from several levels of dc voltages as inputs. For this reason, multilevel inverters can easily provide the high power required of a large electric traction drive. For example, in a parallel-configured HEV, a cascaded H-bridges inverter can be used to drive the traction motor from a set of batteries, ultracapacitors, or fuel cells. In a distributed energy system consisting of fuel cells, wind turbines, solar cells, etc. the multilevel converter provides a mechanism to feed these sources into an existing three phase power grid. The use of a cascade inverter also allows the converter to operate even with the failure of one level of the inverter structure [10–12].

A multilevel inverter is more efficient than a two-level pulse width modulation (PWM) inverter. This is because the individual devices in a multilevel converter have a much lower $\mathrm{d}V/\mathrm{d}t$ per switching, and they switch at the much lower fundamental frequency rather than at 2–20 kHz frequency in a PWM-controlled inverters. As a result, the switching losses are on the order of ten times less in a multilevel inverter. Three, four, and five level rectifier–inverter drive systems that have used some form of multilevel PWM as a

* Corresponding author.
E-mail addresses: chiasson@utk.edu (J. Chiasson), tolbert@utk.edu (L. Tolbert), kmc18@utk.edu (K. McKenzie), zdu1@utk.edu (Z. Du).

0378-4754/$30.00
doi:10.1016/S0378-4754(03)00067-3

means to control the switching of the rectifier and inverter sections have been investigated in the literature [4,6,8,9,14].

However, a key issue in designing an effective multilevel inverter is to ensure that the voltage total harmonic distortion (THD) is small enough. To do so requires both an (mathematical) algorithm to determine when the switching should be done so as to not produce harmonics and a fast real-time computing system to implement the strategy. The present work addresses both of these issues.

2. Cascaded H-bridges

Cascade multilevel inverter consists of a series of H-bridge (single-phase full-bridge) inverter units. The general function of this multilevel inverter is to synthesize a desired voltage from several separate dc sources (SDCSs), which may be obtained from batteries, fuel cells, or ultracapacitors in a HEV. Fig. 1 shows a single-phase structure of a cascade inverter with SDCSs [5]. Each SDCS is connected to a single-phase full-bridge inverter. Each inverter level can generate three different voltage outputs, $+V_{\mathrm{dc}}$, 0 and $-V_{\mathrm{dc}}$ by connecting the dc source to the ac output side by different combinations of the four switches, S_1, S_2, S_3 and S_4. The ac output of each level's full-bridge inverter is connected in series such that the synthesized voltage waveform is the sum of all of the individual inverter outputs. The number of output phase voltage levels in a cascade mulitilevel inverter is then $2s+1$, where s is the number of dc sources. An example phase voltage waveform for an 11-level cascaded multilevel inverter with five SDSCs ($s = 5$) and five full bridges is shown in Fig. 2. The output phase voltage is given by $v_{\mathrm{an}} = v_{a1} + v_{a2} + v_{a3} + v_{a4} + v_{a5}$. With enough levels and an *appropriate* switching algorithm, the multilevel inverter results in an output voltage that is almost sinusoidal. For the five SDCS example shown in Fig. 2, the waveform has less than 5% THD with each of the active devices of the H-bridges switching only at the fundamental frequency.

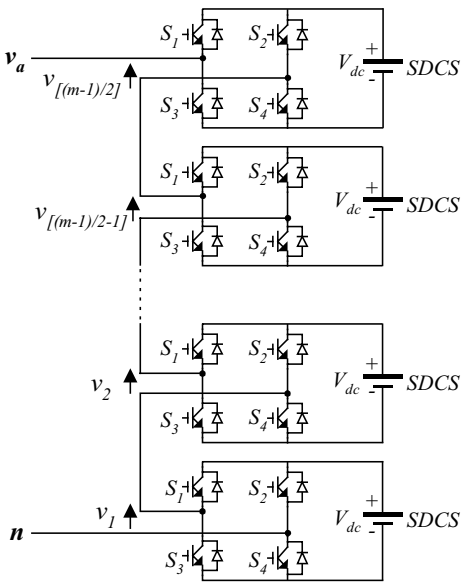

Fig. 1. Single-phase structure of a multilevel cascaded H-bridges inverter.

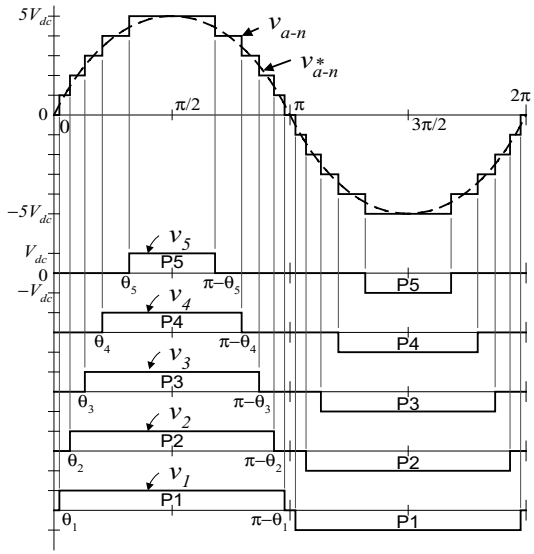

Fig. 2. Output waveform of an 11-level cascade multilevel inverter.

Each H-bridge unit generates a quasi-square waveform by phase-shifting its positive and negative phase legs' switching timings. Each switching device always conducts for 180° (or 1/2 cycle) regardless of the pulse width of the quasi-square wave so that this switching method results in equalizing the current stress in each active device.

3. Switching algorithm for the multilevel converter

The Fourier series expansion of the (stepped) output voltage waveform of the multilevel inverter as shown in Fig. 2 is [10–12]

$$V(\omega t) = \sum_{n=1,3,5,\ldots}^{\infty} \frac{4V_{\mathrm{dc}}}{n\pi}(\cos(n\theta_1) + \cdots + \cos(n\theta_s))\sin(n\omega t) \tag{1}$$

where s is the number of dc sources. Ideally, given a desired fundamental voltage V_1, one wants to determine the switching angles $\theta_1, \ldots, \theta_n$ so that (1) becomes $V(\omega t) = V_1 \sin(\omega t)$. In practice, one is left with trying to do this approximately. Two predominate methods in choosing the switching angles $\theta_1, \ldots, \theta_n$ are (1) eliminate the lower frequency dominant harmonics, or (2) minimize the total harmonic distortion. The more popular and straightforward of the two techniques is the first, that is, eliminate the lower dominant harmonics and filter the output to remove the higher residual frequencies. Here, the choice is also to eliminate the lower frequency harmonics.

The goal here is to choose the switching angles $0 \le \theta_1 < \theta_2 < \cdots < \theta_s \le \pi/2$ so as to make the first harmonic equal to the desired fundamental voltage V_1 and specific higher harmonics of $V(\omega t)$ equal to zero. As the application of interest here is a three-phase motor drive, the triplen harmonics in each phase need not be canceled as they automatically cancel in the line-to-line voltages. Consequently, the desire here is to cancel the 5th, 7th, 11th, 13th order harmonics as they dominate the total harmonic distortion.

The mathematical statement of these conditions is then

$$\frac{4V_{\mathrm{dc}}}{\pi}(\cos(\theta_1)+\cos(\theta_2)+\cdots+\cos(\theta_s)) = V_1 \tag{2}$$

$$\cos(5\theta_1)+\cos(5\theta_2)+\cdots+\cos(5\theta_s) = 0$$

$$\cos(7\theta_1)+\cos(7\theta_2)+\cdots+\cos(7\theta_s) = 0$$

$$\cos(11\theta_1)+\cos(11\theta_2)+\cdots+\cos(11\theta_s) = 0$$

$$\cos(13\theta_1)+\cos(13\theta_2)+\cdots+\cos(13\theta_s) = 0.$$

This is a system of five transcendental equations in the unknowns $\theta_1, \theta_2, \ldots, \theta_s$ so that at least five steps are needed ($s = 5$) if there is to be any chance of a solution. One approach to solving this set of nonlinear transcendental Eq. (2) is to use an iterative method such as the Newton–Raphson method [2,10–12]. The correct solution to the conditions (2) would mean that the output voltage of the 11-level inverter would not contain the 5th, 7th, 11th and 13th order harmonic components.

In what follows, a methodology for finding all the solutions to (2) is presented. It will be shown that a solution exists for only specific ranges of the modulation index[1] $m_{\mathrm{I}} \triangleq V_1/(4sV_{\mathrm{dc}}/\pi)$. As one would expect, this range does not include the low end or the high end of the modulation index.

The methodology is based on the mathematical theory of resultants of polynomials [3] which is a systematic procedure for finding the roots of systems of polynomial equations. To use the method, the system (2) must be first converted to an equivalent polynomial system. This is done by defining (with $s = 5$) $x_1 = \cos(\theta_1), x_2 = \cos(\theta_2), x_3 = \cos(\theta_3), x_4 = \cos(\theta_4), x_5 = \cos(\theta_5)$. The trigonometric identities

$$\cos(5\theta) = 5\cos(\theta) - 20\cos^3(\theta) + 16\cos^5(\theta)$$

$$\cos(7\theta) = -7\cos(\theta) + 56\cos^3(\theta) - 112\cos^5(\theta) + 64\cos^7(\theta)$$

$$\cos(11\theta) = -11\cos(\theta) + 220\cos^3(\theta) - 1232\cos^5(\theta) + 2816\cos^7(\theta) - 2816\cos^9(\theta) + 1024\cos^{11}(\theta)$$

$$\begin{aligned}\cos(13\theta) = {} & 13\cos(\theta) - 364\cos^3(\theta) + 2912\cos^5(\theta) - 9984\cos^7(\theta) + 16640\cos^9(\theta) \\ & - 13312\cos^{11}(\theta) + 4096\cos^{13}(\theta)\end{aligned}$$

are then used in (2) so that the conditions are now

$$p_1(x) \triangleq x_1 + x_2 + x_3 + x_4 + x_5 - m = 0 \tag{3}$$

$$p_5(x) \triangleq \sum_{i=1}^{5}(5x_i - 20x_i^3 + 16x_i^5) = 0$$

$$p_7(x) \triangleq \sum_{i=1}^{5}(-7x_i + 56x_i^3 - 112x_i^5 + 64x_i^7) = 0$$

[1] Each inverter has a dc source of V_{dc} so that the maximum output voltage of the multilevel inverter is sV_{dc}. A square wave of amplitude sV_{dc} results in the maximum fundamental output possible of $V_{1\max} = 4sV_{\mathrm{dc}}/\pi$. The modulation index is therefore $m_{\mathrm{I}} \triangleq V_1/V_{1\max} = V_1/(4sV_{\mathrm{dc}}/\pi)$.

$$p_{11}(x) \triangleq \sum_{i=1}^{5}(-11x_i + 220x_i^3 - 1232x_i^5 + 2816x_i^7 - 2816x_i^9 + 1024x_i^{11}) = 0$$

$$p_{13}(x) \triangleq \sum_{i=1}^{5}(13x_i - 364x_i^3 + 2912x_i^5 - 9984x_i^7 + 16640x_i^9 - 13312x_i^{11} + 4096x_i^{13}) = 0$$

where $x = (x_1, x_2, x_3, x_4, x_5)$ and $m \triangleq V_1/(4V_{\mathrm{dc}}/\pi)$. This is now a set of five *polynomial* equations in the five unknowns x_1, x_2, x_3, x_4, x_5. Further, the solutions must satisfy $0 \le x_5 < \cdots < x_2 < x_1 \le 1$. The theory of resultants is briefly described next as it provides the method to solve such sets of polynomial equations.

3.1. Resultants

The theory of resultants provides a systematic way to solve systems of *polynomial* equations [1,3]. For example, given the two polynomials

$$\begin{aligned} a(x_1, x_2) &= a_3(x_1)x_2^3 + a_2(x_1)x_2^2 + a_1(x_1)x_2 + a_0(x_1) \\ b(x_1, x_2) &= b_3(x_1)x_2^3 + b_2(x_1)x_2^2 + b_1(x_1)x_2 + b_0(x_1) \end{aligned} \tag{4}$$

the issue here is to find their common zeros, that is, the values (x_{10}, x_{20}) such that

$$a(x_{10}, x_{20}) = b(x_{10}, x_{20}) = 0.$$

This question can be answered by asking a more general question. Specifically, does there exist another pair of polynomials

$$\begin{aligned} \alpha(x_1, x_2) &= \alpha_2(x_1)x_2^2 + \alpha_1(x_1)x_2 + \alpha_0(x_1) \\ \beta(x_1, x_2) &= \beta_2(x_1)x_2^2 + \beta_1(x_1)x_2 + \beta_0(x_1). \end{aligned}$$

such that

$$\alpha(x_1, x_2)a(x_1, x_2) + \beta(x_1, x_2)b(x_1, x_2) = 1.$$

Note that if such a pair $\{\alpha(x_1, x_2), \beta(x_1, x_2)\}$ exists, then $a(x_1, x_2)$, $b(x_1, x_2)$ *cannot* have a common zero. Also, if such a solution pair is found, then it can be assumed that (see [1,3])

$$\begin{aligned} \deg_{x_2}\{\alpha(x_1, x_2)\} &< \deg_{x_2}\{b(x_1, x_2)\} = 3 \\ \deg_{x_2}\{\beta(x_1, x_2)\} &< \deg_{x2}\{a(x_1, x_2)\} = 3. \end{aligned}$$

By equating powers of x_2, the equation $\alpha(x)a(x) + \beta(x)b(x) = 1$ may be rewritten in matrix form as

$$\begin{bmatrix} a_0 & 0 & 0 & b_0 & 0 & 0 \\ a_1 & a_0 & 0 & b_1 & b_0 & 0 \\ a_2 & a_1 & a_0 & b_2 & b_1 & b_0 \\ a_3 & a_2 & a_1 & b_3 & b_2 & b_1 \\ 0 & a_3 & a_2 & 0 & b_3 & b_2 \\ 0 & 0 & a_3 & 0 & 0 & b_3 \end{bmatrix} \begin{bmatrix} \alpha_0 \\ \alpha_1 \\ \alpha_2 \\ \beta_0 \\ \beta_1 \\ \beta_2 \end{bmatrix} = \begin{bmatrix} 1 \\ 0 \\ 0 \\ 0 \\ 0 \\ 0 \end{bmatrix} \tag{5}$$

where the 6×6 matrix on the left-hand side is referred to as the *Sylvester resultant* matrix and is denoted here as $S_{a,b}(x_1) \in \mathfrak{R}^{6\times 6}[x_1]$. Note that the elements of the resultant matrix $S_{a,b}(x_1)$ are polynomials in x_1. For an arbitrary pair of polynomials $\{a(x), b(x)\}$ of degrees n_a, n_b in x_2, respectively, the matrix $S_{a,b}(x_1)$ is of dimension $(n_a + n_b) \times (n_a + n_b)$.

Theorem. *The resultant matrix is nonsingular if and only if $a(x)$ and $b(x)$ are coprime* (*that is, if only if they have no zeros in common*).

Proof. See [1,3] □

As a consequence of this theorem, the pair of polynomials (4) has a solution if and only if $r(x_1) \triangleq \det S_{a,b}(x_1) = 0$. One computes the roots x_{1k}, $k = 1, \ldots, n_1$ of $r(x_1) = 0$ and substitutes these roots into $a(x_1, x_2)$. Then, for $k = 1, \ldots, n_1$ solving $a(x_{1k}, x_2) = 0$ gives the roots $x_{2k\ell}$, $\ell = 1, \ldots, n_a$. The common zeros of $\{a(x_1, x_2), b(x_1, x_2)\}$ are then those values of $(x_{1k}, x_{2k\ell})$ that satisfy $b(x_{1k}, x_{2k\ell}) = 0$.

3.2. Three dc source case

To illustrate the use of resultant theory to solve the system (3), the three dc source case is considered, that is, $s = 3$. The conditions are then

$$p_1(x) \triangleq x_1 + x_2 + x_3 - m = 0, \quad m \triangleq \frac{V_1}{4V_{\mathrm{dc}}/\pi} = sm_{\mathrm{I}} \tag{6}$$

$$p_5(x) \triangleq \sum_{i=1}^{3}(5x_i - 20x_i^3 + 16x_i^5) = 0$$

$$p_7(x) \triangleq \sum_{i=1}^{3}(-7x_i + 56x_i^3 - 112x_i^5 + 64x_i^7) = 0.$$

Substitute $x_3 = m - (x_1 + x_2)$ into p_5, p_7 to get

$$\begin{aligned} p_5(x_1, x_2) = {} & 5x_1 - 20x_1^3 + 16x_1^5 + 5x_2 - 20x_2^2 + 16x_2^5 + 5(m - x_1 - x_2) \\ & - 20(m - x_1 - x_2)^3 + 16(m - x_1 - x_2)^5 \end{aligned}$$

$$\begin{aligned} p_7(x_1, x_2) = {} & -7x_1 + 56x_1^3 - 112x_1^5 + 64x_1^7 - 7x_2 + 56x_2^3 - 112x_2^5 + 64x_2^7 - 7(m - x_1 - x_2) \\ & + 56(m - x_1 - x_2)^3 - 112(m - x_1 - x_2)^5 + 64(m - x_1 - x_2)^7 \end{aligned}$$

The goal here is to find solutions of $p_5(x_1, x_2) = 0$, $p_7(x_1, x_2) = 0$. For each fixed x_1, $p_5(x_1, x_2)$ can be viewed as a polynomial in x_2 whose coefficients are polynomials in x_1. For each fixed x_1, the pair of polynomials $p_5(x_1, x_2) = 0$, $p_7(x_1, x_2) = 0$ has a solution x_2 if and only if the corresponding resultant matrix $S_{p_5,p_7}(x_1)$ is singular. Here $\deg_{x_2}\{p_5(x_1, x_2)\} = 4$ and $\deg_{x_2}\{p_7(x_1, x_2)\} = 6$ so that the resultant matrix $S_{p_5,p_7}(x_1)$ is an element of $\mathfrak{R}^{10\times 10}[x_1]$, that is, it is a 10×10 matrix whose elements are polynomials in x_1. The determinant of this matrix $r_{5,7}(x_1) \triangleq \det S_{p_5,p_7}(x_1)$ is a polynomial in x_1. For any (x_{10}, x_{20}) which is a simultaneous solution of $p_5(x_1, x_2) = 0$, $p_7(x_1, x_2) = 0$, it must follow that $r_{5,7}(x_{10}) = 0$. Consequently, finding the roots $r_{5,7}(x_1)$ gives candidate solutions for x_1 to check for common zeros of

$p_5 = p_7 = 0$. The resultant polynomial $r_{5,7}(x_1)$ of the pair $\{p_5(x_1, x_2), p_7(x_1, x_2)\}$ was found with MATHEMATICA using the `Resultant` command. The polynomial $r_{5,7}(x_2)$ turned out to be a 22nd order polynomial.

Algorithm for the seven-level case: The algorithm is as follows:

(1) Given m, find the roots of $r_{5,7}(x_1) = 0$.
(2) Discard any roots that are less than zero, greater than 1 or that are complex. Denote the remaining roots as $\{x_{1i}\}$.
(3) For each fixed zero x_{1i} in the set $\{x_{1i}\}$, substitute it into p_5 and solve for the roots of $p_5(x_{1i}, x_2) = 0$.
(4) Discard any roots (in x_2) that are complex, less than zero or greater than one. Denote the pairs of remaining roots as $\{(x_{1j}, x_{2j})\}$.
(5) Compute $m - x_{1j} - x_{2j}$ and discard any pair (x_{1j}, x_{2j}) that makes this quantity negative or greater than one. Denote the triples of remaining roots as $\{(x_{1k}, x_{2k}, x_{3k})\}$.
(6) Discard any triple for which $x_{3k} < x_{2k} < x_{1k}$ does not hold. Denote the remaining triples as $\{(x_{1l}, x_{2l}, x_{3l})\}$. The switching angles $\{(\theta_{1l}, \theta_{2l}, \theta_{3l})\}$ that are a solution to the three level system (6) are given by

$$\{(\cos^{-1}(x_{1l}), \cos^{-1}(x_{2l}), \cos^{-1}(x_{3l}))\}.$$

3.2.1. Minimization of the fifth and seventh harmonic components

For those values of m for which $p_5(x_1, x_2)$, $p_7(x_1, x_2)$ do not have common zeros satisfying $0 \le x_1 \le 1$, $0 \le x_2 \le 1$, the next best thing is to minimize the error

$$c(x_1, x_2) = \tfrac{1}{25} p_5^2(x_1, x_2) + \tfrac{1}{49} p_7^2(x_1, x_2)$$

This was accomplished by simply computing the values of $c(j\Delta x, k\Delta y)$ for $j, k = 0, \ldots, 1000$ with $\Delta x = 0.001$, $\Delta y = 0.001$ and then choosing the minimum value.

3.2.2. Results for the three dc cource inverter

The results are summarized in Fig. 3. This figure shows the switching angles $\theta_1, \theta_2, \theta_3$ versus m for those values of m in which the system (6) has a solution. The parameter m was incremented in steps of 0.01. Note that for m in the range from approximately 1.49 to 1.85, there are two different sets of solutions that solve (6). (One would then choose the set which happens to result in smaller 11th and 13th harmonics.) On the other hand, for $m \in [0, 0.8]$, $m \in [0.83, 1.15]$ and $m \in [2.52, 2.77]$ there are no solutions to (6). Interestingly, for $m \approx 0.8$, $m \approx 0.82$ and $m \approx 2.76$ there are (isolated) solutions.

As pointed out above, for $m \in [0, 0.8]$, $m \in [0.83, 1.15]$, $m \in [2.52, 2.77]$ and $m \in [2.78, 3]$ there are no solutions satisfying the conditions (6). Consequently, for these ranges of m, the switching angles were determined by minimizing the error $\sqrt{(p_5/5)^2 + (p_7/7)^2}$. Fig. 4 shows a plot of the resulting minimum error vs. m for these values of m. As Fig. 4 shows, when $m \approx 0.81$ and $m \approx 2.76$, the error is zero corresponding to the isolated solutions to (6) for those values of m. For $m = 1.15$ and $m = 2.52$, the error goes to zero because these values correspond to the boundary of the exact solutions of (6). However, note, e.g. when $m = 0.25$, the error is about 0.25, that is, the error is the same size as m. Other than close to the endpoints of the two intervals $[0, 0.8]$, $[2.78, 3]$ the minimum error is too large to make the corresponding switching angles for this interval of any use. Consequently, for m in this interval, one must use some other approach (e.g. PWM) in order to get reduced harmonics. For the other two intervals

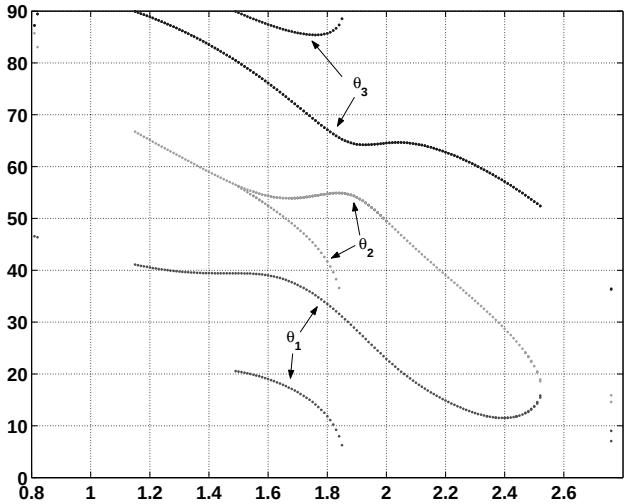

Fig. 3. The switching angle $\theta_1, \theta_2, \theta_3$ in degrees vs. m.

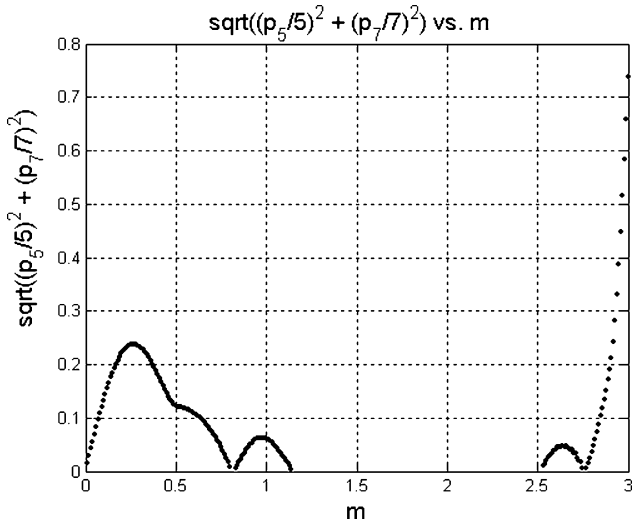

Fig. 4. Error $= \sqrt{(p_5/5)^2 + (p_7/7)^2}$ vs. m.

[0.83, 1.15], [2.52, 2.77], the minimum error is around 5% or less so that it might be satisfactory to use the corresponding switching angles for these intervals.

4. Experimental work

A prototype three-phase 11-level wye-connected cascaded inverter has been built using 100 V, 70 A MOSFETs as the switching devices [13]. The gate driver boards and block diagram are shown in Figs. 5

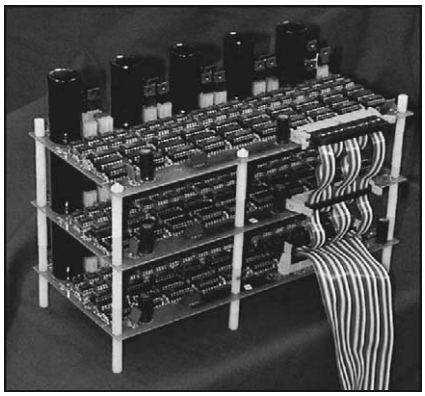

Fig. 5. Gate driver boards and MOSFETs for the mulitlevel inverter.

and 6 below. A battery bank of 15 SDCSs of 48 V dc (not shown) each feed the inverter (five SDCSs per phase). In the experimental study here, this prototype system was configured to be a seven-level (three SDCSs per phase) converter with each level being 12 V. The ribbon cable shown in the figure provides the communication link between the gate driver board and the real-time processor. In this work, the RT-LAB real-time computing platform from Opal-RT Technologies Inc. [7] was used to interface the computer (which generates the logic signals) to this cable. The RT-LAB system allows one to write the switching algorithm in SIMULINK which is then converted to *C* code using RTW. The RT-LAB software provides icons to interface the SIMULINK model to the digital I/O board and also converts the *C* code into executables. As explained above, an execution time of 16 μs was used. This required using a dual processor board with shared memory to spread the computation between two processors wherein one processor controlled two of the phases while the other processor controlled the remaining phase. The RT-LAB software provides the capability to easily set up this distributed computation. Further, the XHP (extra high performance) option in RT-LAB was also required to achieve the 16 μs step

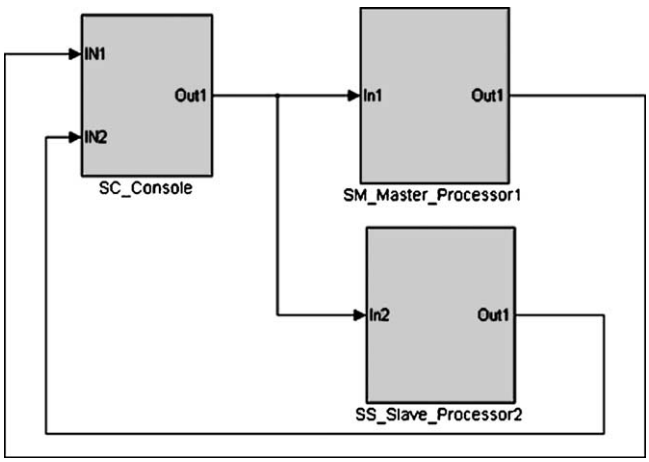

Fig. 6. Block diagram of the distributed computing layout for a three phase multilevel converter.

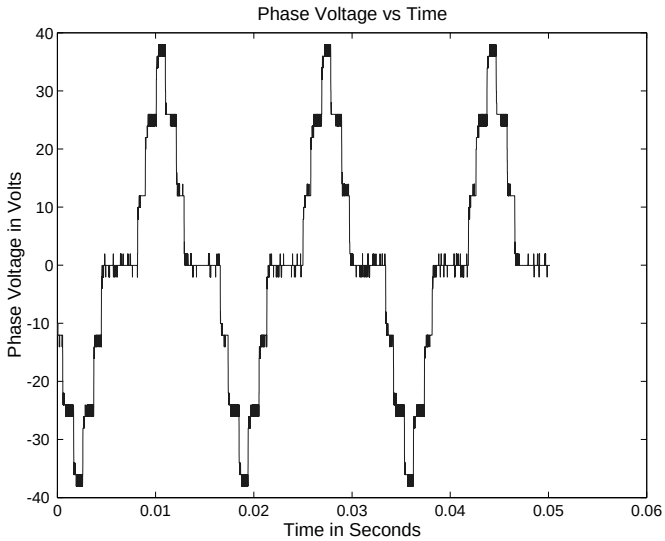

Fig. 7. Phase voltage when $m = 1.5$.

size. In this option, an operating system is not used in order to remove its overhead from the computational burden. Experiments were performed to validate the theoretical results of Section 3.2.2. That is, the elimination of the fifth and seventh harmonics (at 300 and 420 Hz, respectively, for a 60 Hz fundamental waveform) in the output of a three phase multilevel inverter. Recall that the triplen harmonics (180, 360 and 540 Hz, etc.) in each phase need not be canceled as they automatically cancel in the line-to-line voltages. Experiments were performed for several values of the parameter m each consistent with predicted results given in Fig. 4. However, due to space limitations, only the case with $m = 1.5$ is reported here. The frequency was set to 60 Hz in each case and the program was run in real-time with a 16 μs sample period, i.e. the logic signals were updated to the gate driver board every 16 μs. This sample period was chosen to provide a time resolution of 1/1000 of the 60 Hz period as in [11].

The voltage was measured using a high speed data acquisition oscilloscope every $T = 5\,\mu$s resulting in the data $\{v(nT), n = 1, \ldots, N\}$, where $N = 3(1/60)/(5 \times 10^{-6}) = 10{,}000$ samples corresponding to three periods of the 60 Hz waveform. A fast Fourier transform was performed on this voltage data to get $\{\hat{v}(k\omega_0), k = 1, \ldots, N\}$ where the frequency increment is $\omega_0 = (2\pi/T)/N = 2\pi(20)$ rad/s or 20 Hz. The number $\hat{v}(k\omega_0)$ is simply the Fourier coefficient of the kth harmonic (whose frequency is $k\omega_0$ with $\omega_0 = (2\pi/N)(1/T)$) in the Fourier series expansion of the phase voltage signal $v(t)$. With $a_k = |\hat{v}(k\omega_0)|$ and $a_{\max} = \max_k \{|\hat{v}(k\omega_0)|\}$, the data that is plotted is the normalized magnitude $a_k/a_{\max}$.

Fig. 7 is the plot of the phase voltage for $m = 1.5$. (The spikes on the plot are due to low bit resolution of the sampling scope and are not present on the actual scope display.) The corresponding FFT of this signal is given in Fig. 8. Fig. 8 shows the normalized magnitude of the fifth harmonic is essentially zero and the normalized magnitude of the seventh harmonic is 0.01, for a total normalized distortion of 0.01 due to these two harmonics. This corresponds well with the predicted error of zero in Fig. 4. (Note that there are still large triplen harmonics.)

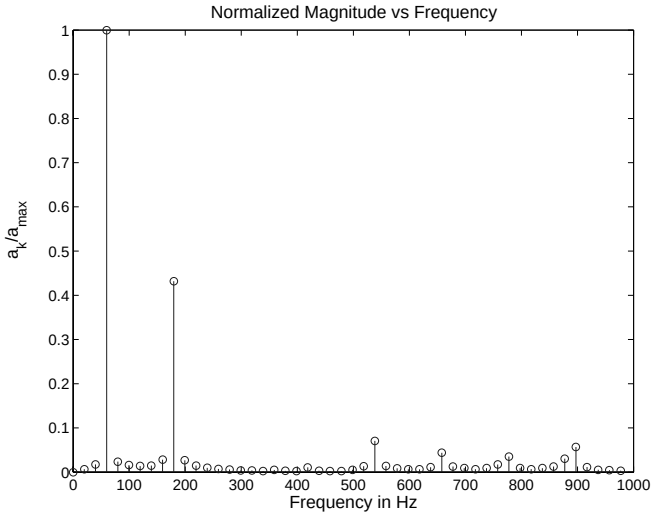

Fig. 8. Normalized FFT $a_k/a_{\max}$.

5. Conclusions and further work

A full solution to the problem of eliminating the fifth and seventh harmonics in a seven level multilevel inverter has been given. Specifically, resultant theory was used to completely characterize for each m when a solution existed and when it did not (in contrast to numerical techniques such as Newton–Raphson). Further, it was shown that for a range of values of m, there were two sets of solutions and these values were also completely characterized. For each value of m, the solution set that happened to minimize the 11th and 13th harmonics was chosen. It was shown that the algorithm could be easily implemented in the high level Simulink software using a dual processor with shared memory using the RT-LAB software. The experimental results presented corresponded well to the theoretically predicted results. Future work is underway to consider the case studied by Cunnyngham [2] where the separate dc sources do not all provide equal voltages V_{dc}.

Acknowledgements

Dr. Tolbert would like to thank the National Science Foundation for partially supporting this work through contract NSF ECS-0093884, and both Drs. Chiasson and Tolbert would like to thank Oak Ridge National Laboratory for partially supporting this work through the UT/Battelle contract number 4000007596. The University of Tennessee is gratefully acknowledged for providing funding for the equipment in this project through its SARIF program. Finally, the authors would like to also thank Opal-RT Technologies for their courteous and professional help in support of this project.

References

[1] C.T. Chen, Linear Systems Theory and Design, third ed., Oxford University Press, Oxford, 1999.
[2] T. Cunnyngham, Cascade multilevel inverters for large hybrid-electric vehicle applications with variant DC sources, Master thesis, The University of Tennessee, 2001.

[3] T. Kailath, Linear Systems, Prentice-Hall, Englewood Cliffs, NJ, 1980.
[4] M. Klabunde, Y. Zhao, T.A. Lipo, Current control of a 3 level rectifier/inverter drive system, in: Proceedings of the Conference Record 1994 IEEE IAS Annual Meeting, 1994, pp. 2348–2356.
[5] J.S. Lai, F.Z. Peng, Multilevel converters—a new breed of power converters, IEEE Trans. Ind. Appl. 32 (3) (1996) 509–517.
[6] W. Menzies, P. Steimer, J.K. Steinke, Five-level GTO inverters for large induction motor drives, IEEE Trans. Ind. Appl. 30 (4) (1994) 938–944.
[7] Opal-RT Technologies, RTLab, 2001 (see http://www.opal-rt.com/).
[8] G. Sinha, T.A. Lipo, A four level rectifier-inverter system for drive applications, in: Proceedings of the Conference Record 1996 IEEE IAS Annual Meeting, 1996, pp. 980–987.
[9] K. Steinke, Control strategy for a three phase AC traction drive with three level GTO PWM inverter, in: Proceedings of the IEEE PESC, 1988, pp. 431–438.
[10] L.M. Tolbert, T.G. Habetler, Novel multilevel inverter carrier-based PWM methods, IEEE Trans. Ind. Appl. 35 (5) (1999) 1098–1107.
[11] L.M. Tolbert, F.Z. Peng, T.G. Habetler, Multilevel converters for large electric drives, IEEE Trans. Ind. Appl. 35 (1) (1999) 36–44.
[12] L.M. Tolbert, F.Z. Peng, T.G. Habetler, Multilevel PWM methods at low modulation indexes, IEEE Trans. Power Electron. 15 (4) (2000) 719–725.
[13] L.M. Tolbert, F.Z. Peng, T. Cunnyngham, J. Chiasson, Charge balance control schemes for cascade multilevel converter in hybrid electric vehicles, IEEE Trans. Ind. Electron. 49 (5) (2002) 1058–1064.
[14] J. Zhang, High performance control of a three level IGBT inverter fed AC drive, in: Proceedings of the Conference Record IEEE IAS Annual Meeting, 1995, pp. 22–28.