Circuits II

Topics covered:

- Fundamental analysis techniques for LTI circuits
  - Phasor Modeling
  - Laplace Transform
  - Fourier Series/Transform
- Components and circuits
  - Magnetically coupled circuits
  - Polyphase systems

Prerequisite topics: (ECE201)

- Circuit analysis
  - KVL, KCL, nodal/mesh analysis, superposition, …
- Components and circuits
  - RLC circuits, op-amps
- Math (through Calc 2 & DE)

Contact Information

- **Instructor:** Daniel Costinett
  - Office: MK504
  - OH: T 2:30-4:00, W 3:30-5:00, by appointment
  - E-mail: Daniel.Costinett@utk.edu
  - Please use `[ECE 202]` in the subject line
  - Email questions will be answered within 24 hours (excluding weekends)

Textbook and Materials

Textbook

- Hayt, Kemmerly, Phillips, and Durbin, *Engineering Circuit Analysis* 9th Edition
  - ISBN: 0073545511
  - required
- Course covers Chapters 10-17

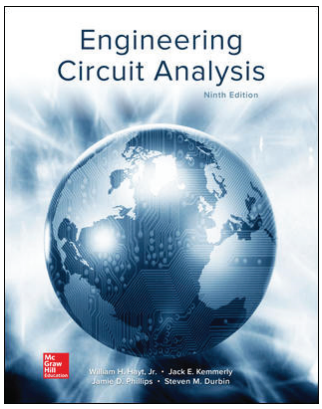

Course Website

- http://web.eecs.utk.edu/~dcostine/ECE202

Software

- MATLAB
- LTSpice

Course Website

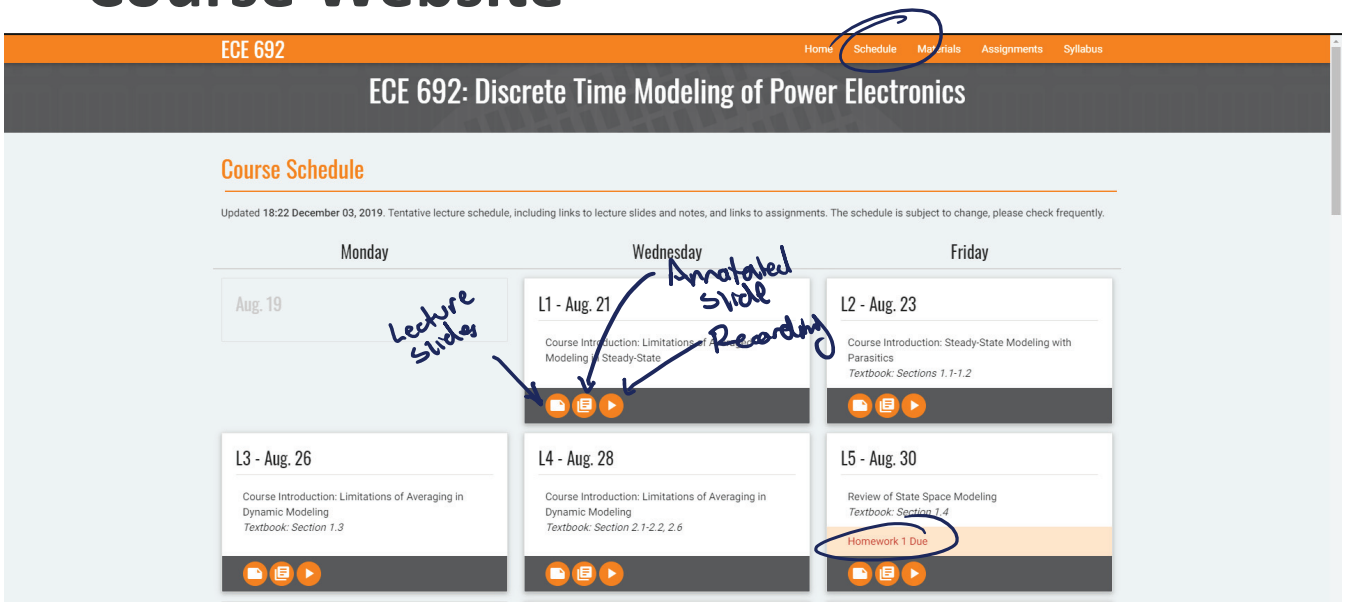

Grading

- **Homework: 20%**
  - Weekly, due on Fridays *before* the start of lecture
  - The one lowest homework grade will be dropped
- **Quizzes: 10%**
  - In-class, open-book, open-note & calculator
- **Labs: 15%**
  - Completed outside of class (by scheduling with TA)
- **Midterms: 30%**
- **Final: 25%**
  - All open-book, open-note & calculator

Assignments

- Submission
  - Homeworks and Labs should be submitted by uploading a pdf to canvas
    - Physical copy submitted prior to the due date/time loses 5% credit
    - https://www.eecs.utk.edu/resources/it/eecs-it-knowledge-base/using-the-scanner/
    - https://libanswers.utk.edu/faq/103187
    - https://acrobat.adobe.com/us/en/mobile/scanner-app.html : app for Android and iOS

Course Policy

- No late work will be accepted except in cases of documented medical emergency
- Collaboration encouraged on Labs and Homework
  - Must submit your own work on all assignments
  - Adhere to Student Code of Conduct
- Attendance is required in all lectures and scheduled lab time

How to Succeed in ECE202

- Attend all lectures
- Read associated sections in the book, as listed on the course schedule
- Work collaboratively to understand homework assignments
  - Complete your own work
  - Review any incorrect answers
- Actively participate in lab sessions
- Review material in advance of quizzes and tests
- Ask questions in lecture / office hours / e-mail after having made an attempt at the material on your own

INTRODUCTION TO ECE202

End of ECE201

Series RLC

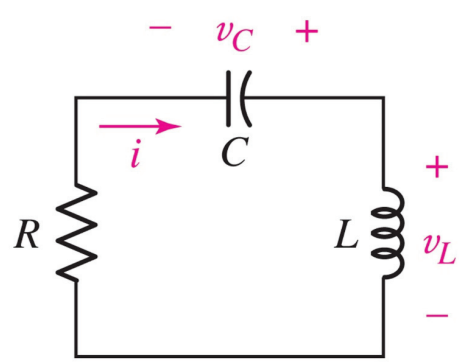

KVL, KCL
Diff. EQs

is this a useful circuit?

$$L\frac{d^2i}{dt^2} + R\frac{di}{dt} + \frac{1}{C}i = 0$$

solve

$$v(t) = A_1 e^{s_1 t} + A_2 e^{s_2 t}$$

$$s_1, s_2 = -\frac{R}{2L} \pm \sqrt{\left(\frac{R}{2L}\right)^2 - \frac{1}{LC}}$$

Example Application: Wireless Power Transfer

Commercial

Research

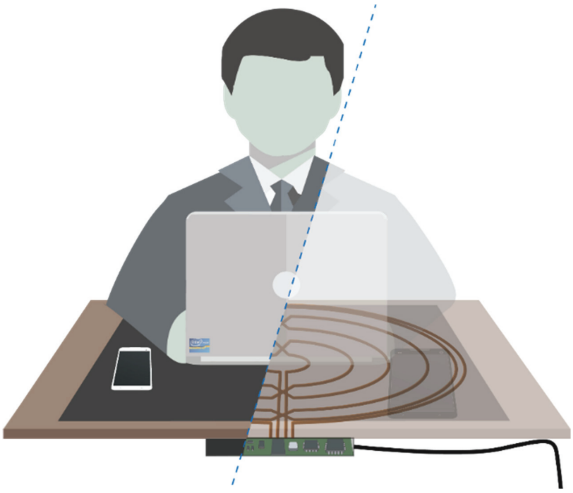

Wireless Power Transfer (WPT)

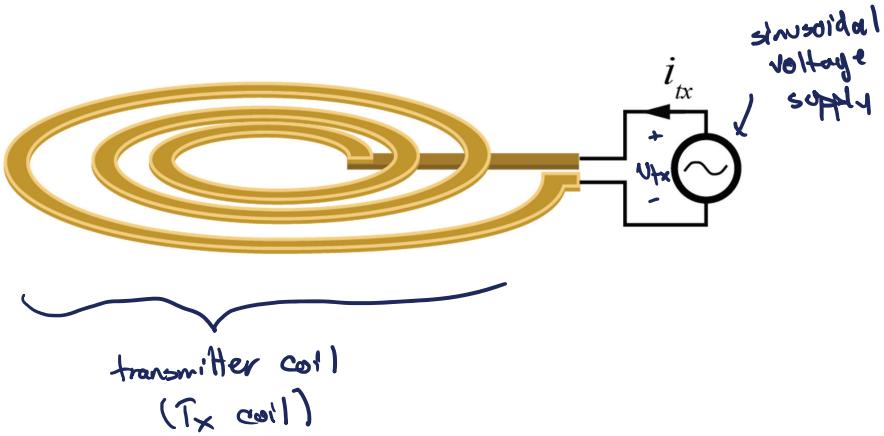

Wireless Power Transfer (WPT)

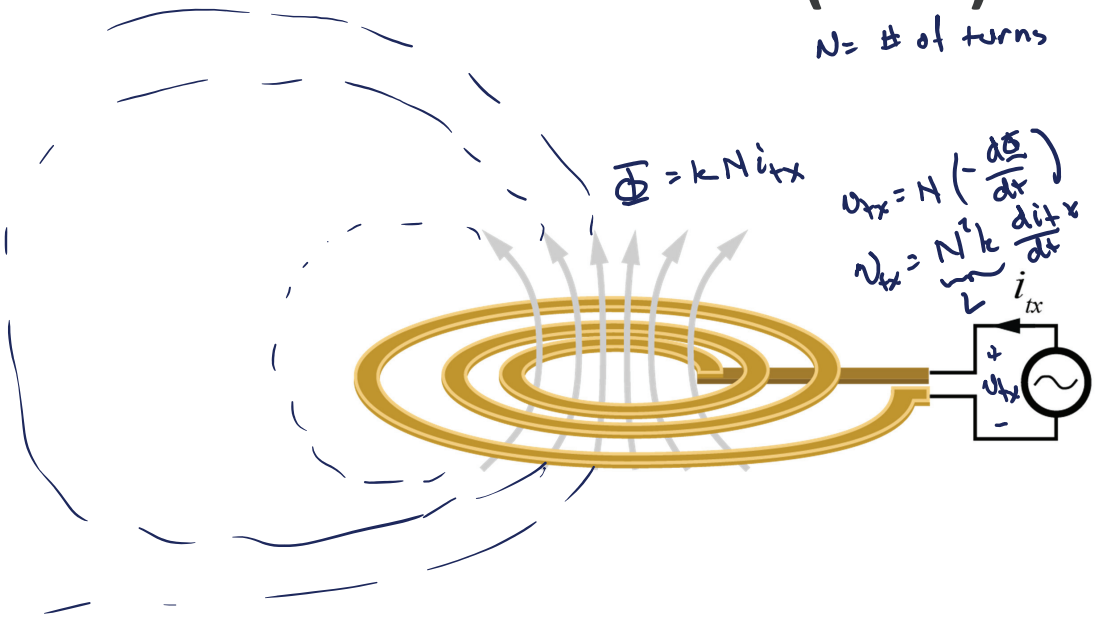

Wireless Power Transfer (WPT)

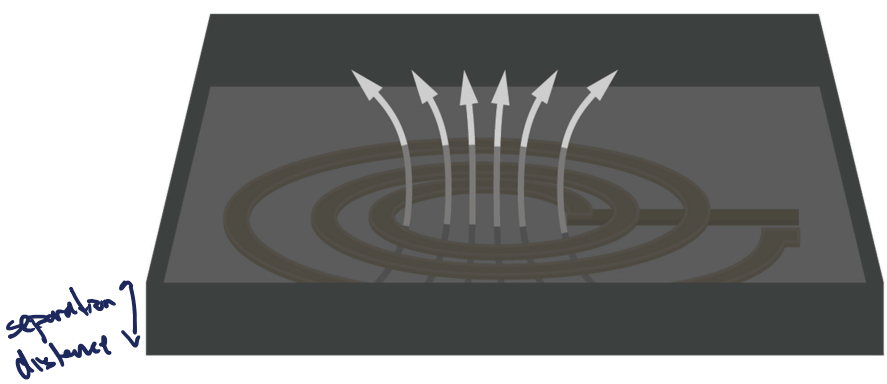

Wireless Power Transfer (WPT)

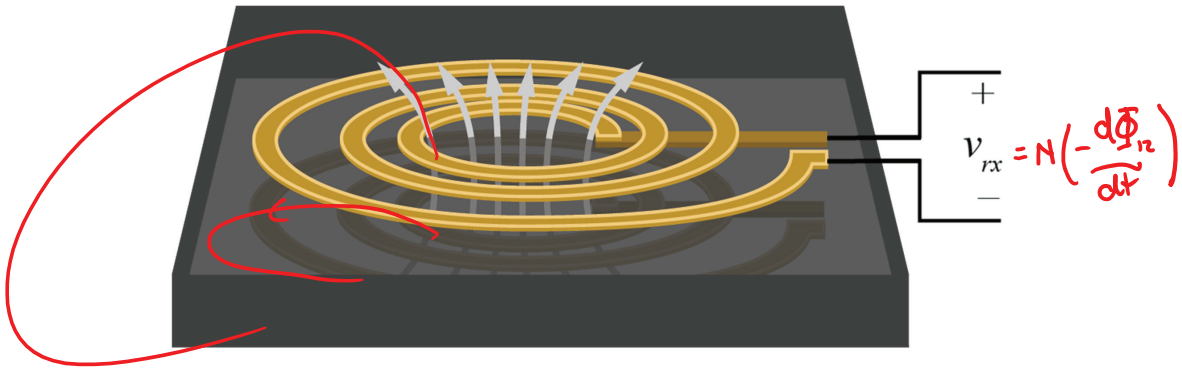

Wireless Power Transfer (WPT)

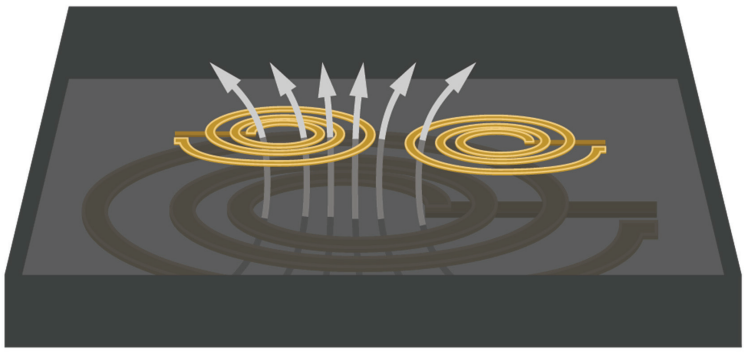

Wireless Power Transfer (WPT)

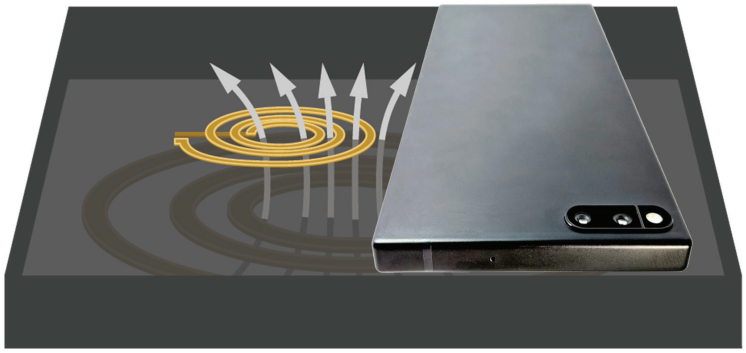

WPT System Design

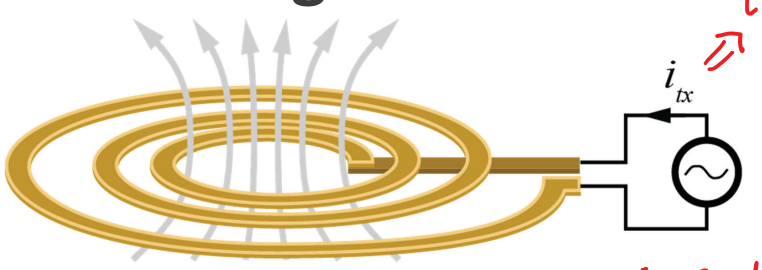

example design

phone has 5Ahr battery @ 4V → Need a 5A, 20W supply to charge a phone in 1 hour

say: $i_{tx} = I_{pk} \sin(\omega t)$ w/ $I_{pk} = 5A$, $\omega = 2\pi\ 150kHz$, $L = 100\mu H$

$$v_{tx} = L\frac{di_{tx}}{dt} = L I_{pk} \omega \cos(\omega t)$$

$$= 150\pi \cos(\omega t)$$

$$\approx 471 \cos(\omega t)$$

↓

471V is <u>way</u> too high for this!

WPT System Design

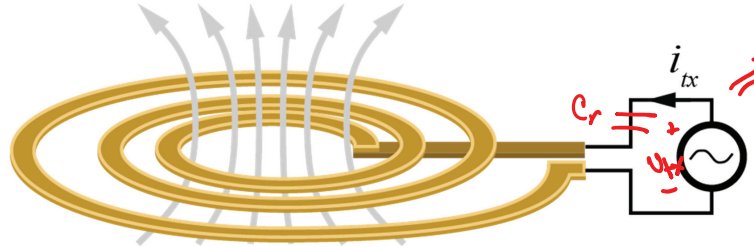

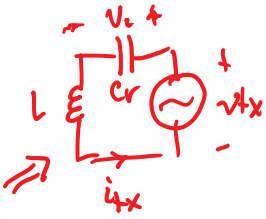

$$i_c = C\frac{dv_c}{dt}$$

$$v_c = \frac{1}{C}\int_0^t i_c\,dt + \cancel{v_c(0)}$$

Add a series capacitor:

$$v_{tx} = v_c + L\frac{di_{tx}}{dt}$$

$$= \frac{1}{C_r}\int_0^t i_{tx}\,dt + L\frac{di_{tx}}{dt}$$

$$= \frac{I_{pk}}{\omega C_r}\left(-\cos(\omega t)\right) + \omega L I_{pk}\cos(\omega t)$$

$$v_{tx} = I_{pk}\left(\omega L - \frac{1}{\omega C_r}\right)\cos(\omega t)$$

one option: set $\omega L = \frac{1}{\omega C_r} \rightarrow \omega = \frac{1}{\sqrt{LC_r}}$

$C_r = 11.25\,nF$

Receiver Side

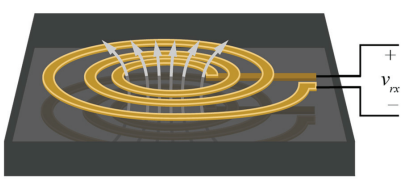

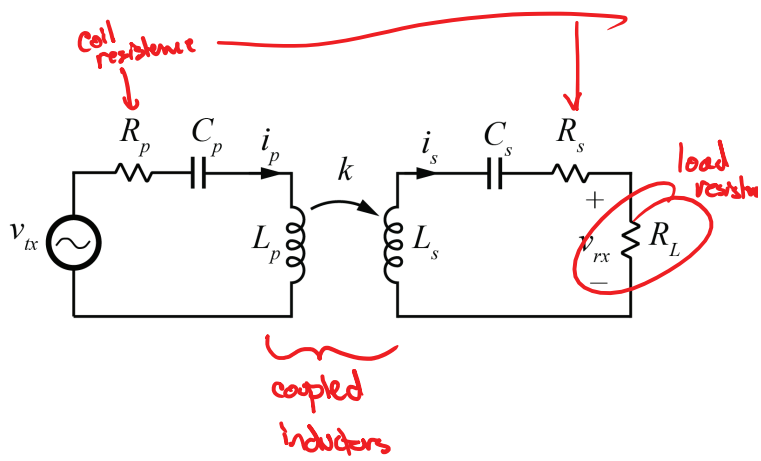

4 DEs

too much math?

A Slightly More Complicated System

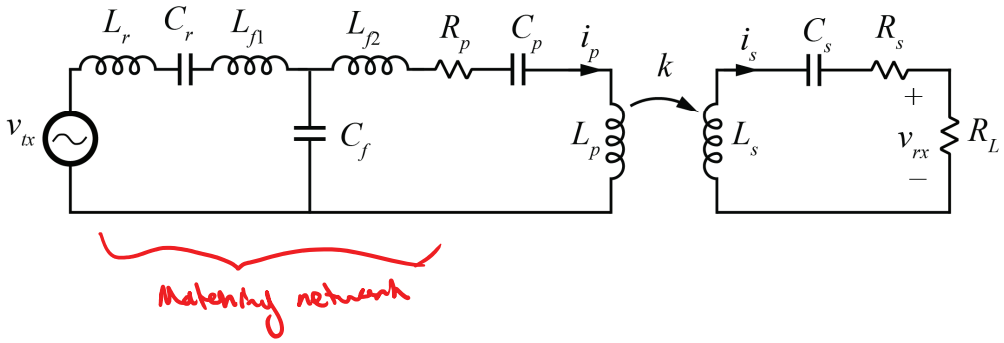

8 DEs

Too much math!

L. Jiang, F. Tamjid, C. Zhao, D. Costinett, A. Fathy and S. Yang, "A GaN-based 100 W two-stage wireless power transmitter with inherent current source output," *2016 IEEE PELS Workshop on Emerging Technologies: Wireless Power Transfer (WoW)*, Knoxville, TN, 2016, pp. 65-72.

A Slightly More Complicated System

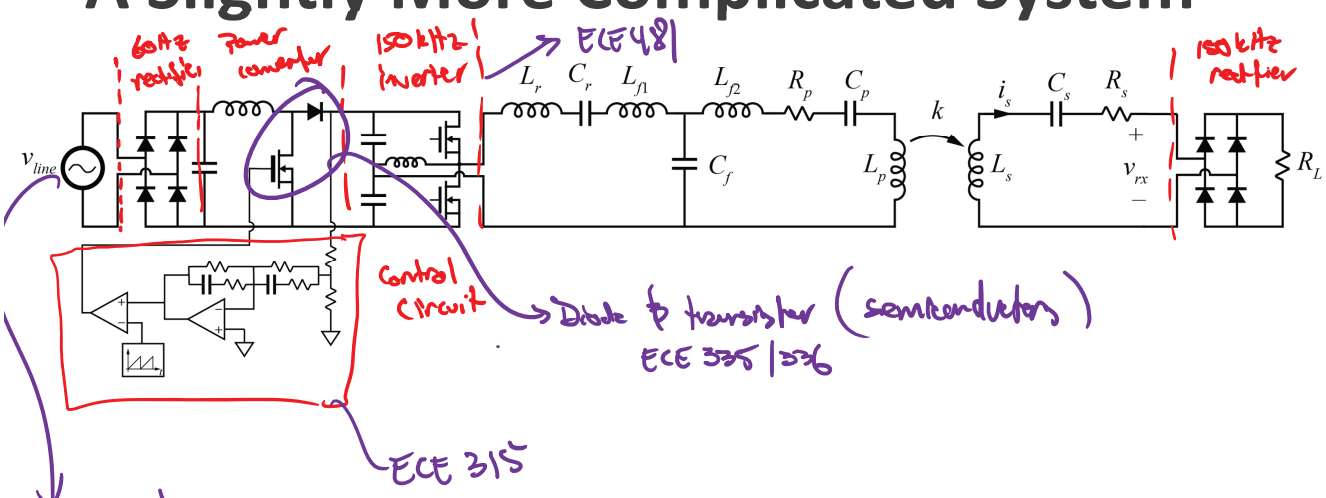

ECE 202: Techniques to more rapidly solve/approx/understand complex circuits

Course Content

- Magnetically Coupled Circuits (Ch 13)
- Sinusoidal Steady-State Analysis (Ch 10)
- AC Circuit Power Analysis (Ch 11)
- Circuit An Analysis in the s-Domain (Ch 14)
- Frequency Response (Ch 15)
- Two-Port Networks (Ch 16)
- Fourier Circuit Analysis (Ch 17)
- Polyphase Circuits (Ch 12)