System I/O Relationship

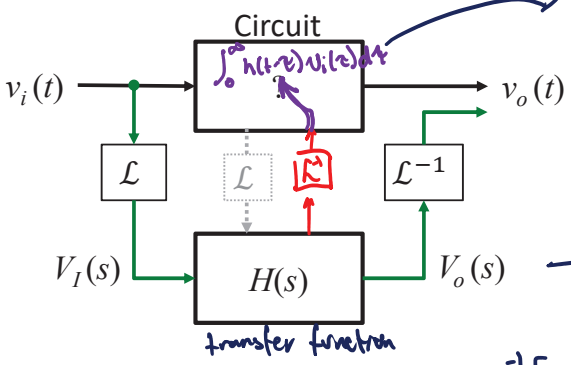

to get $v_o(t)$, solve the circuit, solve diff EQ for $v_o(t)$

↳ or take the convolution integral

$$V_o(s) = H(s) \cdot V_I(s)$$

$$v_o(t) = \mathcal{L}^{-1}\{V_o(s)\} = \mathcal{L}^{-1}\{H(s)V_I(s)\} = ?$$

↳ haven't yet covered $\mathcal{L}^{-1}$ of product of two functions

$$\mathcal{L}^{-1}\{V_I(s)\} = v_i(t)$$

$$\mathcal{L}^{-1}\{H(s)\} = h(t) = \mathcal{L}^{-1}\{H(s)\cdot 1\} = \text{Response @ output if input was impulse}$$

$$h(t) = \mathcal{L}^{-1}\{H(s)\} = \text{"impulse response"}$$

Convolution

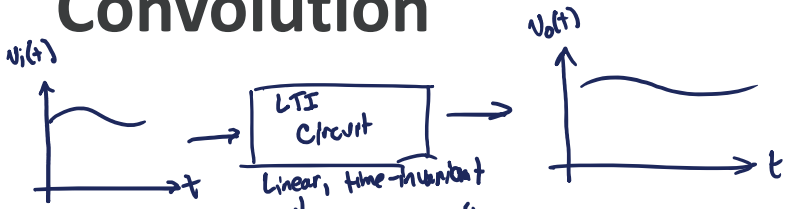

Linear, time-invariant
↓
superposition applies

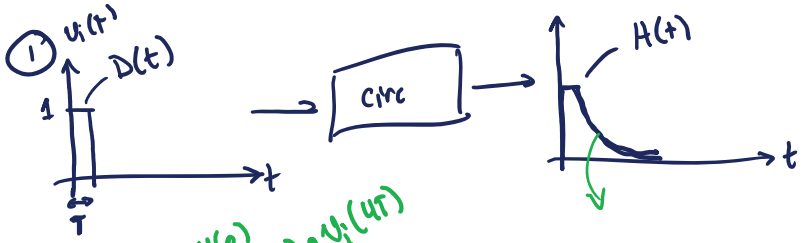

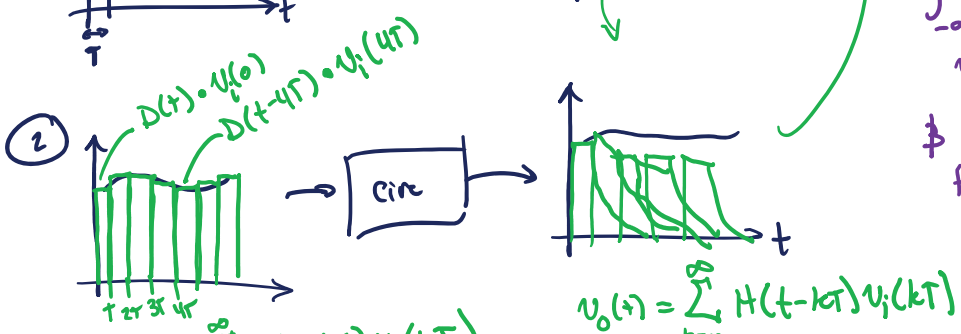

$$v_i(t) \approx \sum_{k=0}^{\infty} D(t-kT)\, v_i(kT)$$

$$v_o(t) = \sum_{k=0}^{\infty} H(t-kT)\, v_i(kT)$$

Let $T \to \emptyset$

$$v_i(t) = \int_0^\infty \delta(t-\tau)\, v_i(\tau)\, d\tau$$

$$v_o(t) = \int_0^\infty h(t-\tau)\, v_i(\tau)\, d\tau = \int_0^\infty h(\tau)\, v_i(t-\tau)\, d\tau$$

Convolution integral

Formally, convolution goes $\int_{-\infty}^{\infty}$, but for Laplace $v_i(t) = 0$ for $t < 0$

& $h(t)$ must be $= \emptyset$ for $t < \emptyset$ if the system is causal

Graphical Convolution

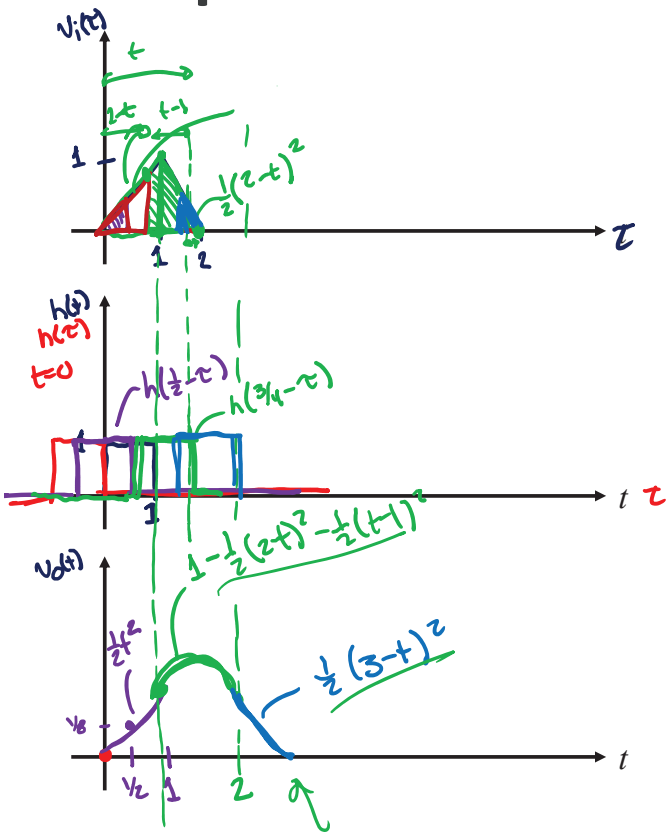

$$\int_0^\infty h(t-\tau)\, v_i(\tau)\, d\tau$$
$$= \int_0^\infty v_i(t-\tau)\, h(\tau)\, d\tau$$

flip - stick - pull