Experiment 1

- Due Friday, March 25th, prior to start of class
  - Start on prelab now
  - Procedure "Background" is review of content (less transformers)
- Prelab
  - Must be completed, individually, prior to labwork
  - Submitted to canvas
  - Design problem – informal
- Labwork
  - Begin *after* completing prelab
  - Completed in groups of 2-3
  - Should take ~2-3 hours
    - If you've completed and understood the prelab
    - No mistakes wiring
  - Either
    - Bring ECE 201/202 parts kit and USB drive to save oscilloscope waveforms
    - Check-out and use Analog Discovery Studio (with some modifications)
- Lab Reports
  - Completed as a group
  - General guidelines document posted to website

Experiment 1 Goal

Table II: Starting Values for System Design

f	L	k (@ 9mm)	R_L	V_{th} , R_{th}
300 kHz	25 μH	0.32	25 Ω	10 V, 50 Ω

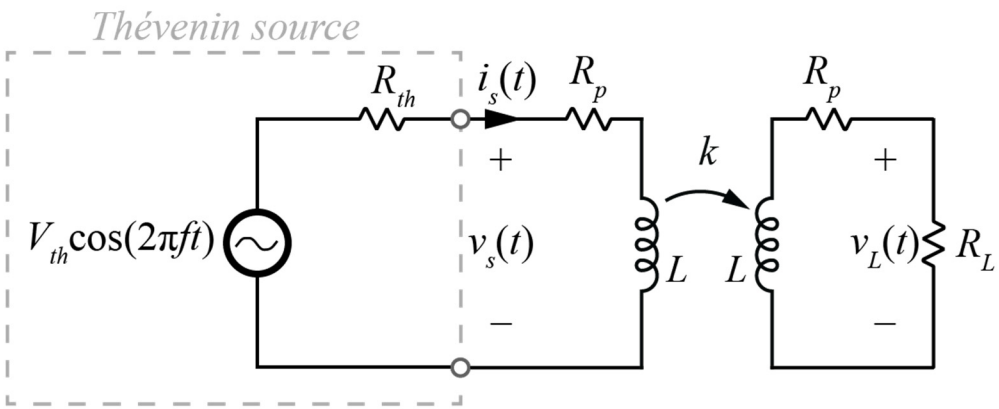

WPT Setup

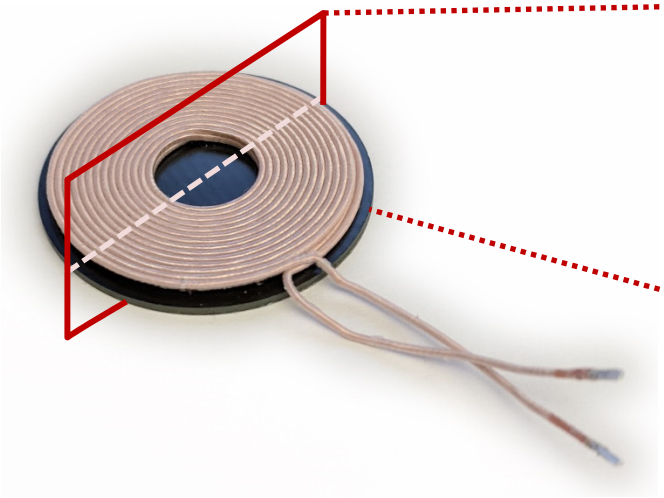

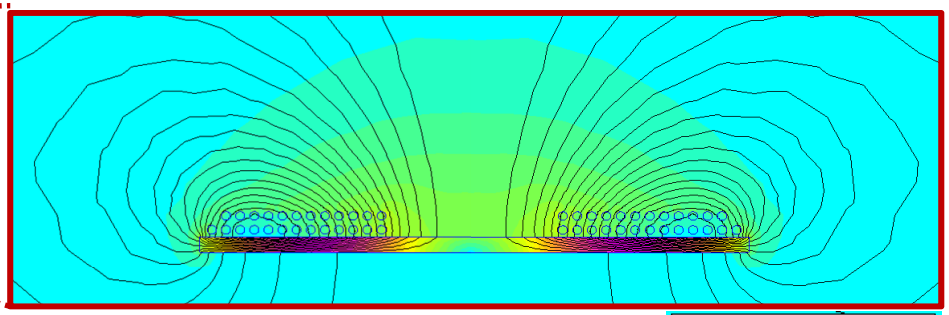

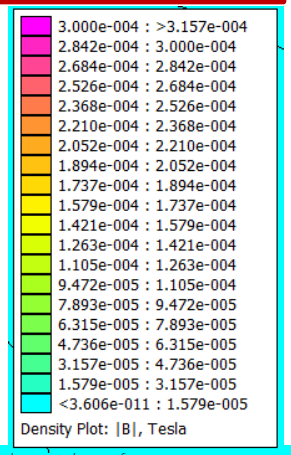
3.000e-004 : >3.157e-004
2.842e-004 : 3.000e-004
2.684e-004 : 2.842e-004
2.526e-004 : 2.684e-004
2.368e-004 : 2.526e-004
2.210e-004 : 2.368e-004
2.052e-004 : 2.210e-004
1.894e-004 : 2.052e-004
1.737e-004 : 1.894e-004
1.579e-004 : 1.737e-004
1.421e-004 : 1.579e-004
1.263e-004 : 1.421e-004
1.105e-004 : 1.263e-004
9.472e-005 : 1.105e-004
7.893e-005 : 9.472e-005
6.315e-005 : 7.893e-005
4.736e-005 : 6.315e-005
3.157e-005 : 4.736e-005
1.579e-005 : 3.157e-005
<3.606e-011 : 1.579e-005
Density Plot: |B|, Tesla

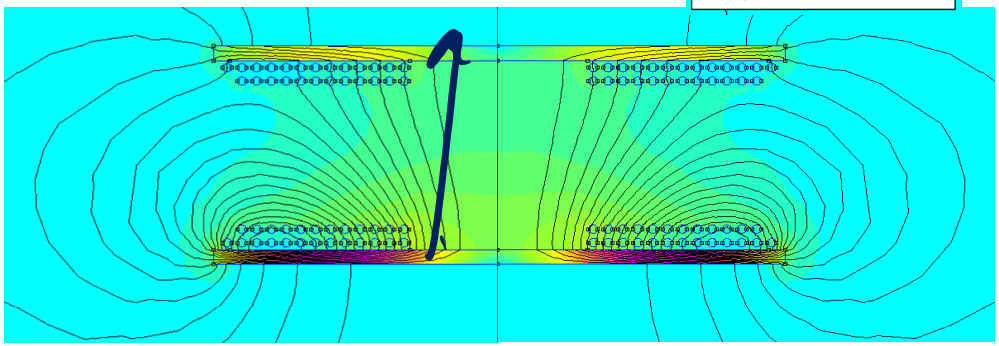

Initial Setup

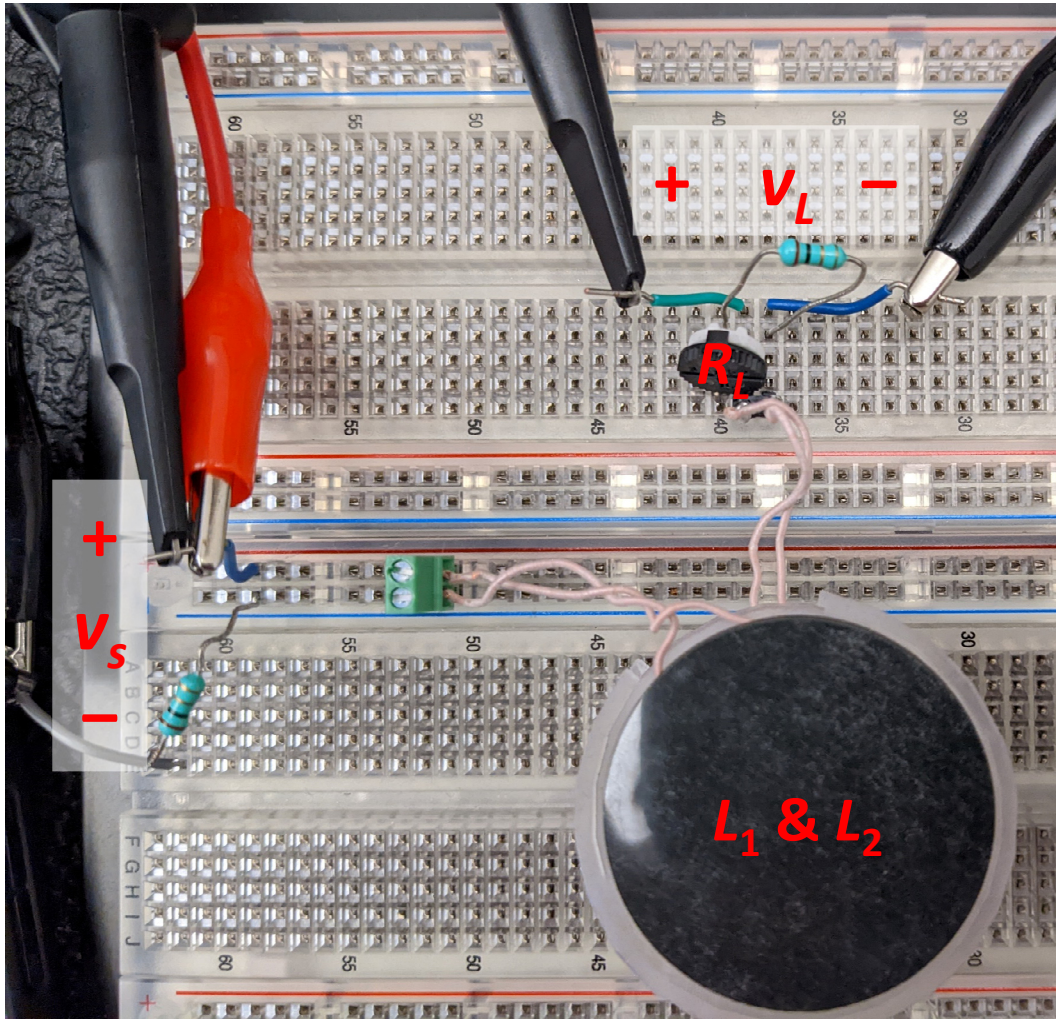

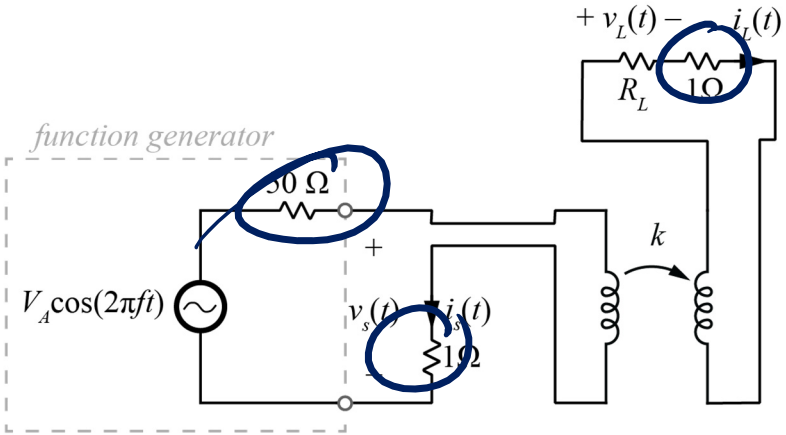

Initial Calculations

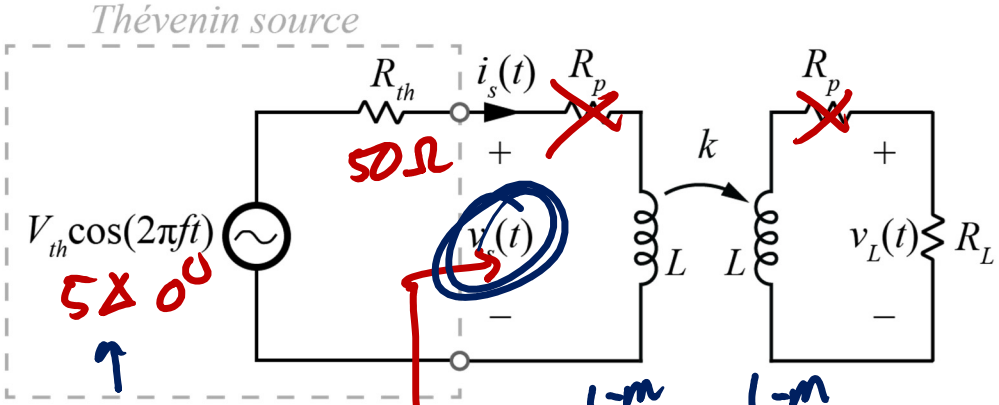

for max power

$Z_{L,eq} = 50\,\Omega$

Maximum possible power

$$P_{max} = \underbrace{\left(\frac{V_{th}}{\sqrt{2}}\right)^2}_{2\cdot 50\Omega} \cdot \frac{1}{2} = 62.5\,mW$$

$L = 25\,mH$

$M = k\sqrt{L_1 L_2} = 8\,mH$

$Z_{L,eq}$

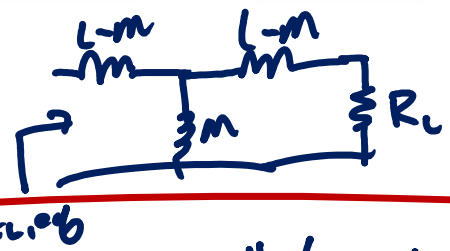

$R_L = 25\,\Omega$

$\omega = 2\pi\, 300\,kHz$

$$Z_{L,eq} = j\omega(L-M) + j\omega M \,\|\, \left(j\omega(L-M) + R_L\right)$$

$$Z_{L,eq} = 2 + j43\,\Omega$$

$$\underline{V_s} = (5\angle 0^\circ)\,\frac{Z_{L,eq}}{Z_{L,eq} + 50} = 3.2\angle 47^\circ\ V$$

$$S_s = \frac{1}{2}\underline{V_s}\,I_s^* = \frac{1}{2}\underline{V_s}\left(\frac{\underline{V_s}}{Z_{L,eq}}\right)^* = \underline{5.4\,mW} + \underline{j118\,mVAR}$$

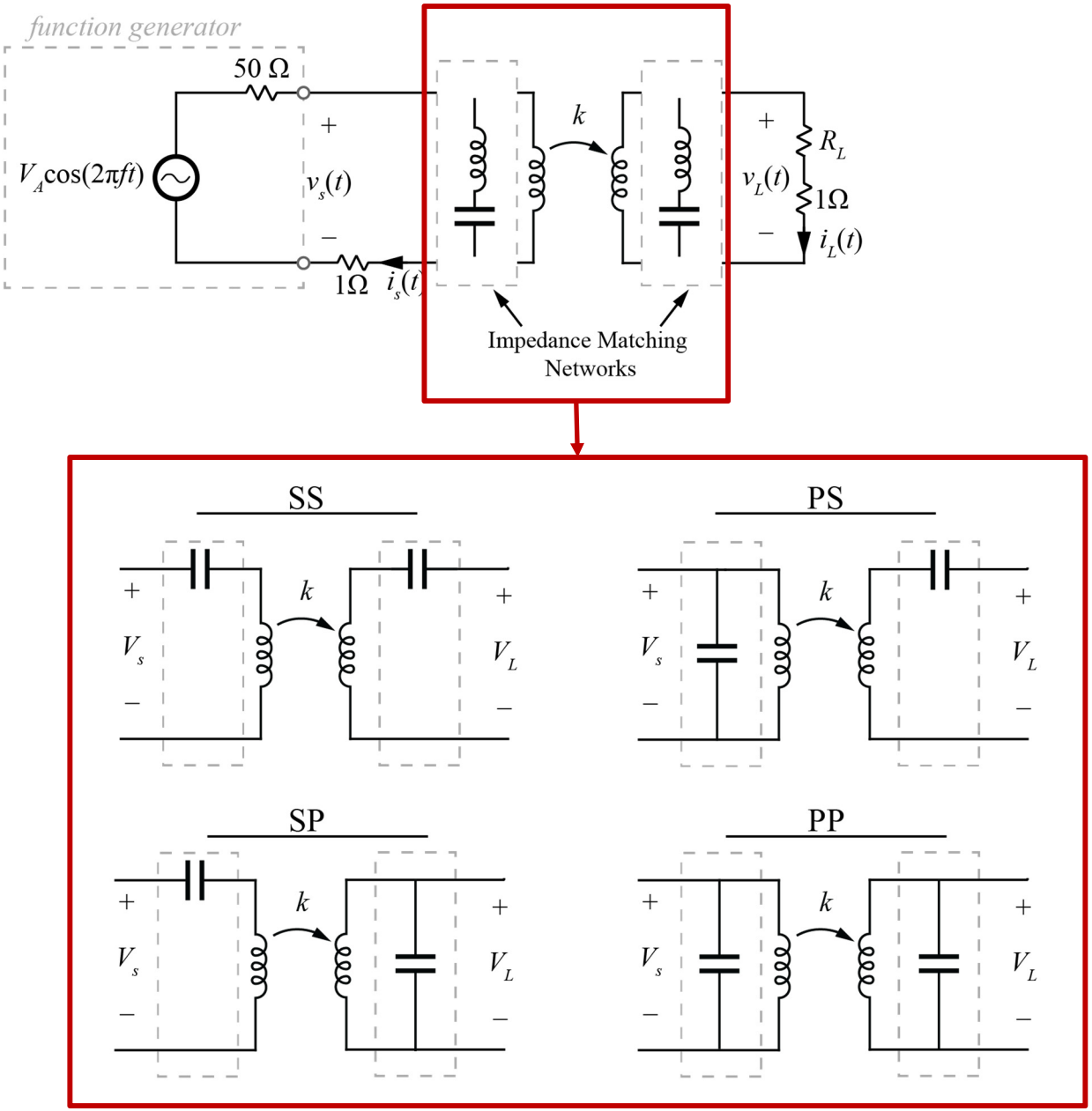
function generator
50 Ω
$V_A\cos(2\pi ft)$
+
$v_s(t)$
−
1Ω
$i_s(t)$
k
+
R_L
$v_L(t)$
1Ω
−
$i_L(t)$
Impedance Matching Networks
SS
PS
SP
PP
+
V_s
−
k
+
V_L
−