Applications of Coupled Inductors

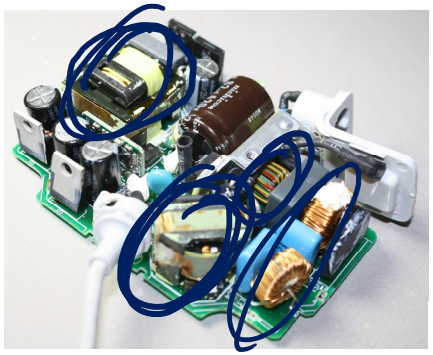

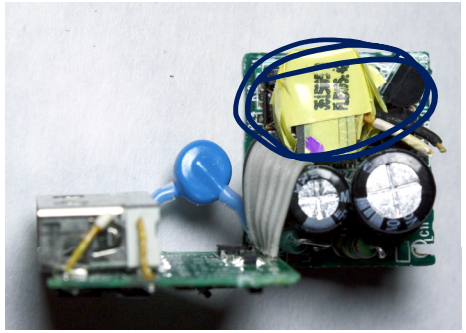

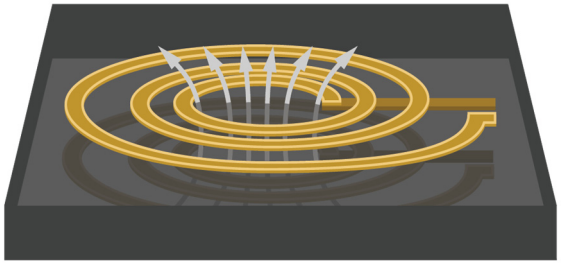

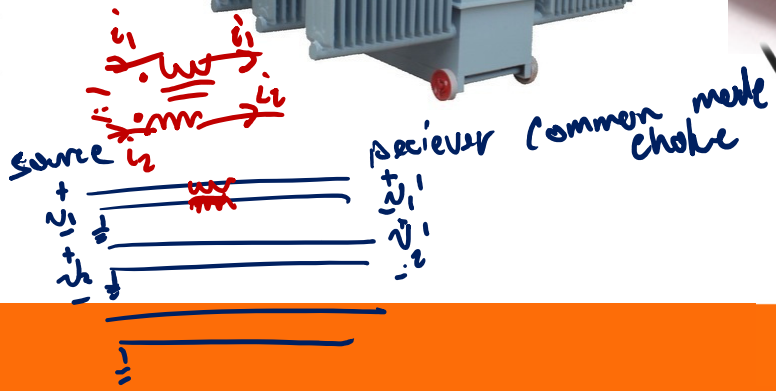

Example Transformer

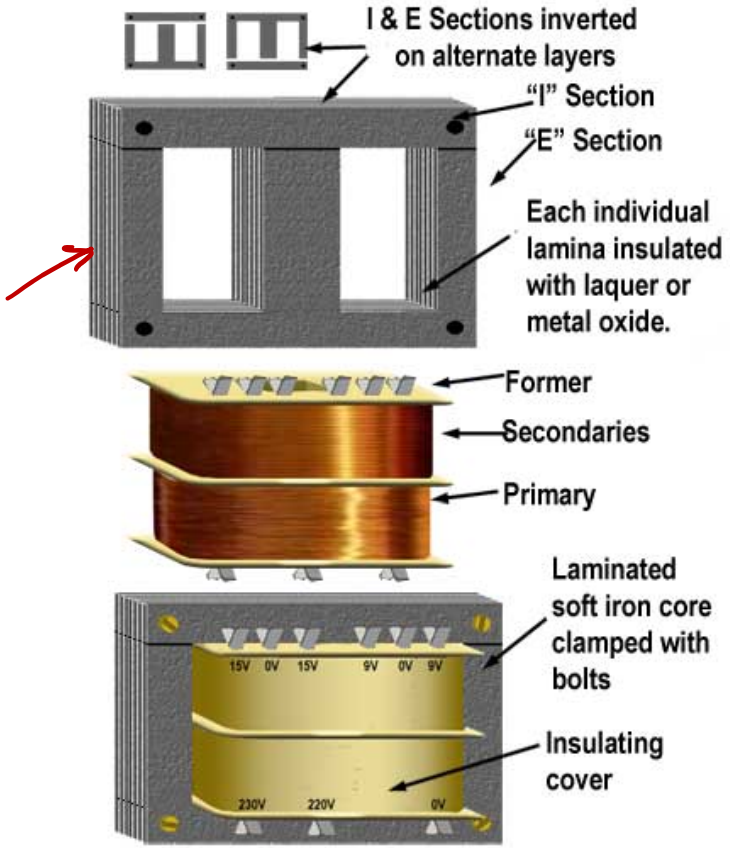

http://www.learnabout-electronics.org/ac_theory/transformers03.php

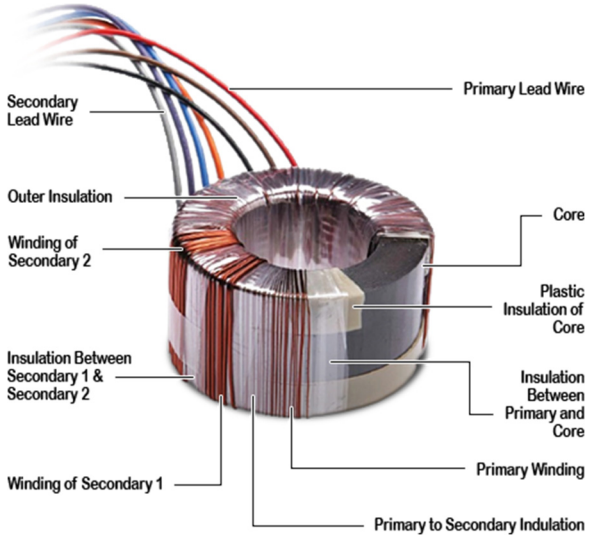

https://www.altrancorp.com/products/toroidal-power-transformers/

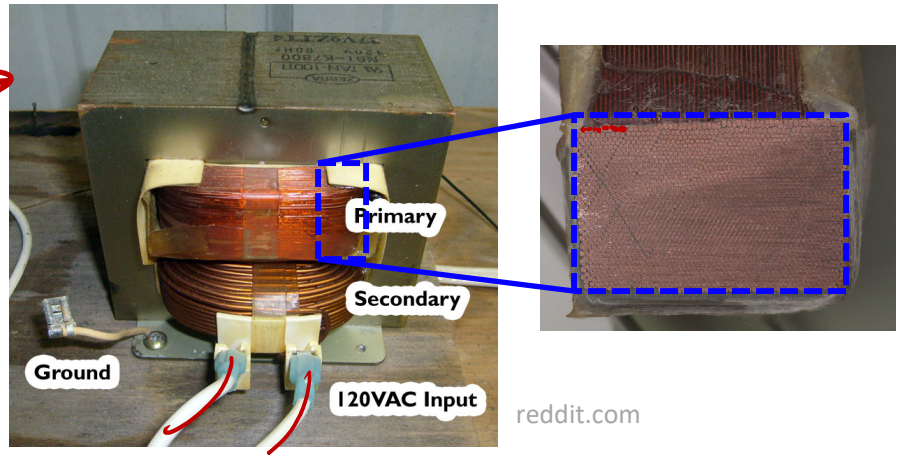

reddit.com

Transformer Reflection

$\frac{v_1}{N_1} = \frac{v_2}{N_2}$

$N_1 i_1 + N_2 i_2 = \phi$

$\frac{v_1}{1} = \frac{v_2}{N}$

$1 \cdot i_1 + N \cdot i_2 = \phi$

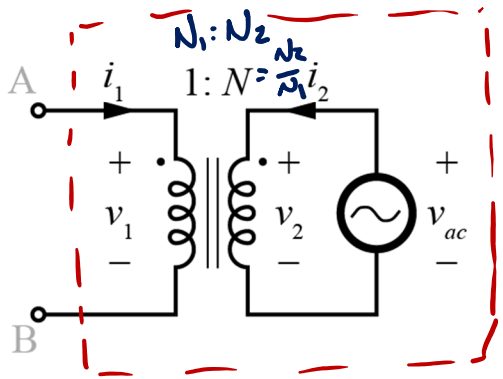

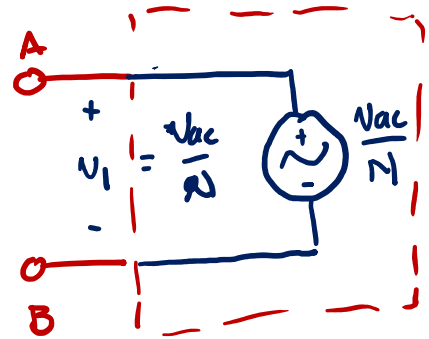

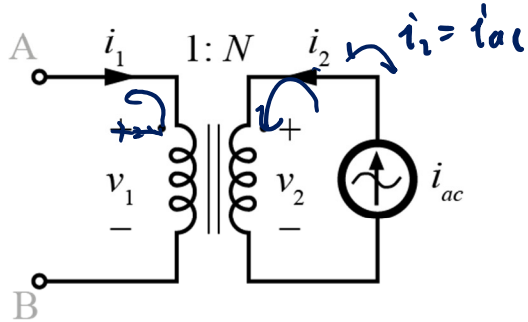

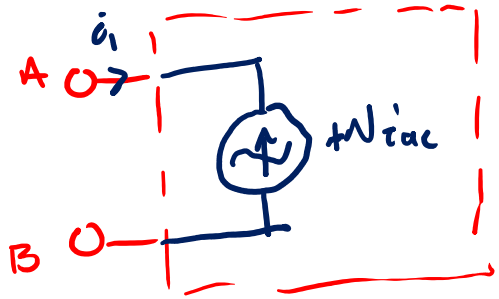

$i_1 + N i_2 = \phi$

$i_1 = -N i_2$

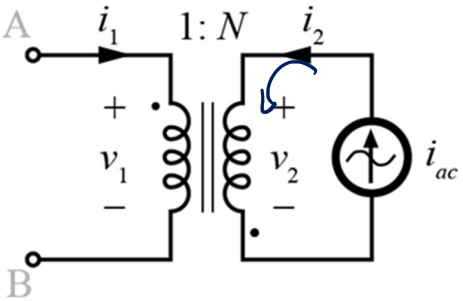

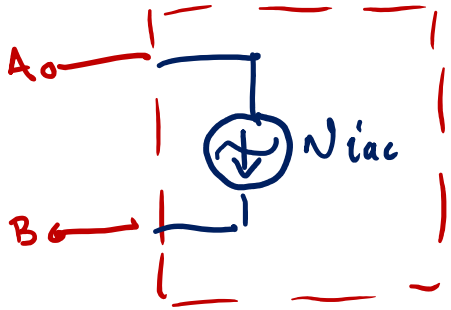

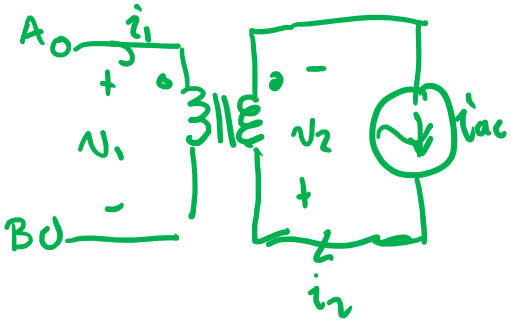

$v_1 = \frac{v_2}{N}$ & $i_1 + N i_2 = \emptyset$

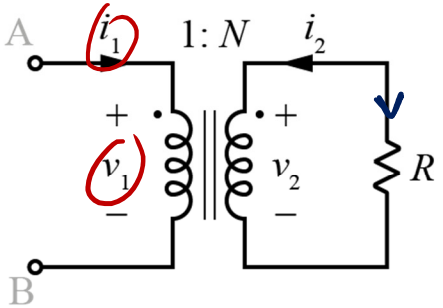

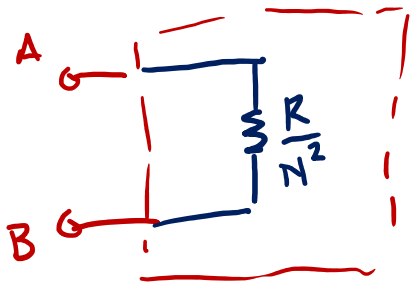

$v_2 = (-i_2) R$

$N v_1 = \left(-\frac{-i_1}{N}\right) R$

$$\boxed{v_1 = i_1 \frac{R}{N^2}}$$

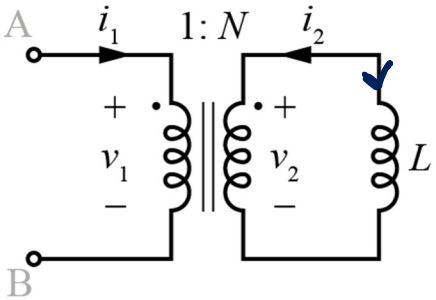

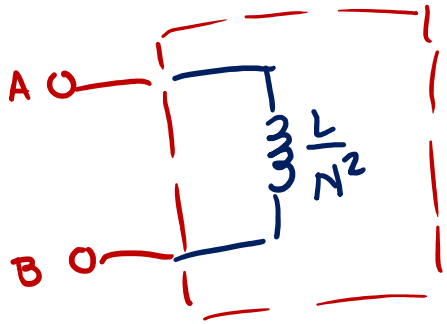

$v_2 = L \frac{d}{dt}(-i_2)$

$N v_1 = L \frac{d}{dt}\left(\frac{i_1}{N}\right)$

$$\boxed{v_1 = \frac{L}{N^2} \frac{di_1}{dt}}$$

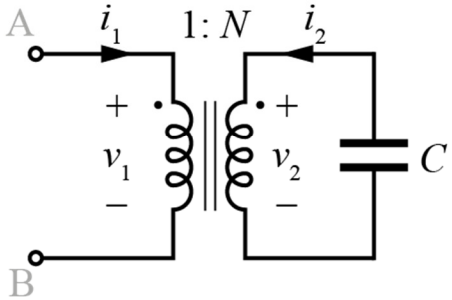

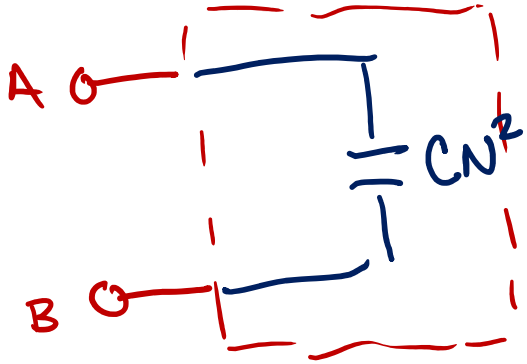

$-i_2 = C \frac{dv_2}{dt}$

$\frac{i_1}{N} = C \frac{d}{dt} N v_1$

$$\boxed{i_1 = N^2 C \frac{dv_1}{dt}}$$

Example Circuit Simplification

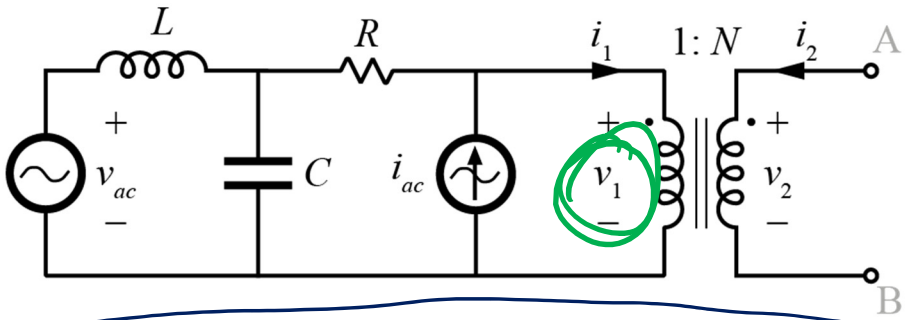

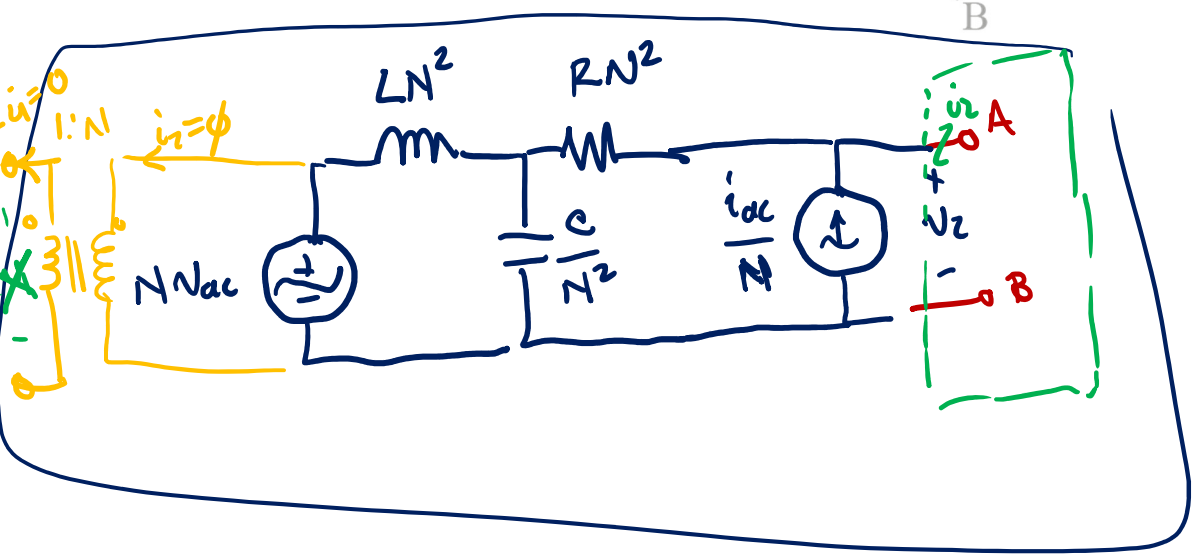

Equivalent Circuits

$$\begin{cases} v_1 = L_1 \frac{di_1}{dt} + M \frac{di_2}{dt} \\ v_2 = M \frac{di_1}{dt} + L_2 \frac{di_2}{dt} \end{cases}$$

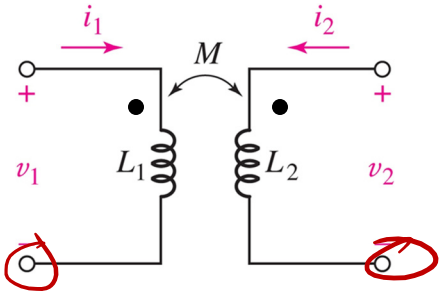

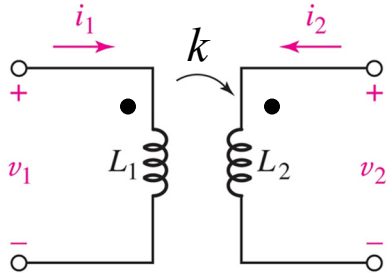

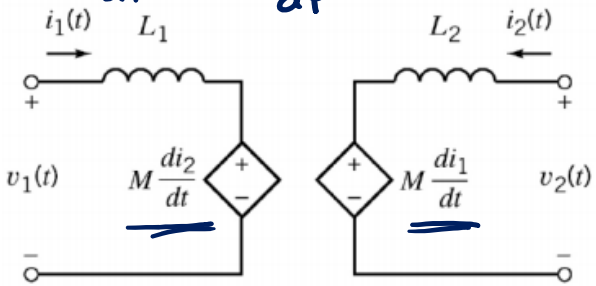

T-Network

$$\begin{cases} v_1 = (L_1 - \cancel{M})\frac{di_1}{dt} + M\frac{d}{dt}(\cancel{i_1} + i_2) \\ v_2 = (L_2 - \cancel{M})\frac{di_2}{dt} + M\frac{d}{dt}(i_1 + \cancel{i_2}) \end{cases}$$

Cantilever Model

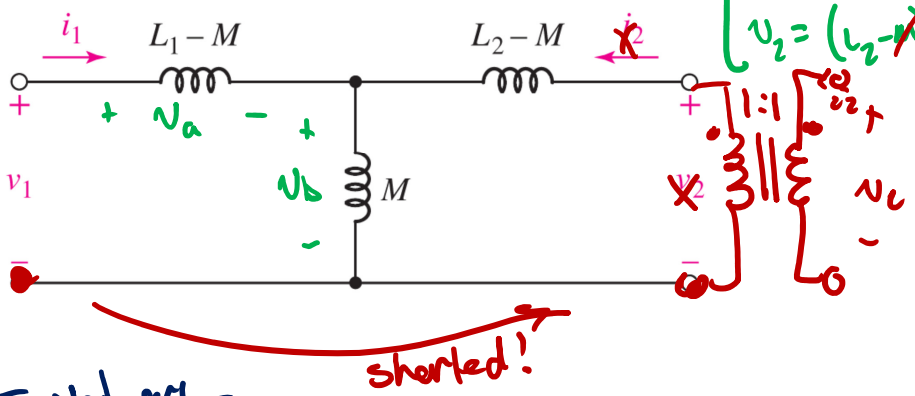

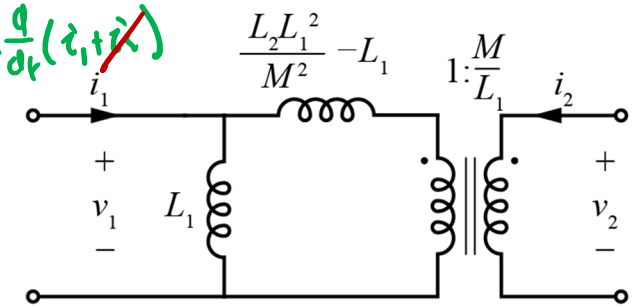

π-Network