Half Bridge Isolated Buck

C_a, C_b "Large"

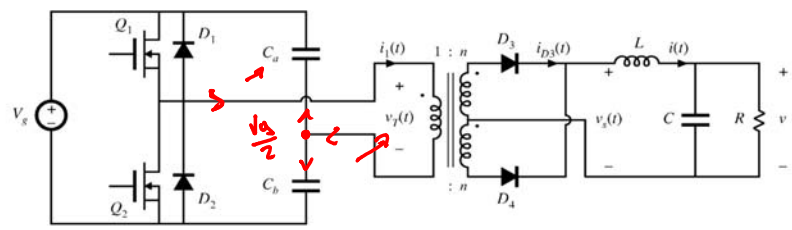

- Replace transistors Q_3 and Q_4 with large capacitors
- Voltage at capacitor centerpoint is $0.5V_g$
- $v_s(t)$ is reduced by a factor of two
- $M = 0.5\ nD$

Push Pull Converter

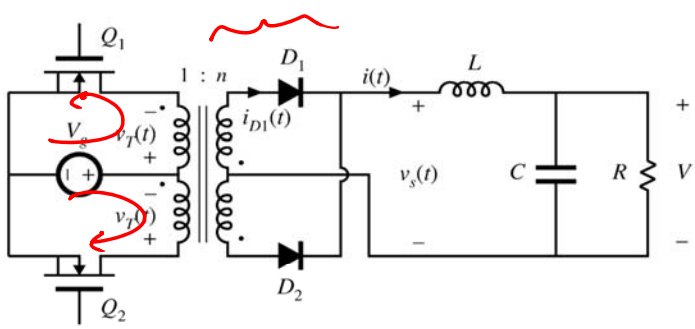

$V = nDV_g$ $\quad 0 \le D \le 1$

6.3.2 Forward Converter

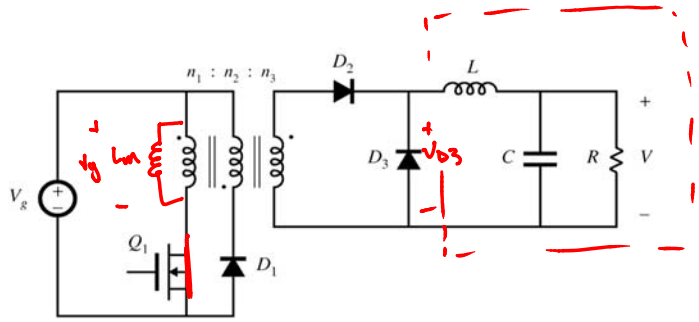

- Buck-derived transformer-isolated converter
- Single-transistor and two-transistor versions
- Maximum duty cycle is limited
- Transformer is reset while transistor is off

Subinterval 1

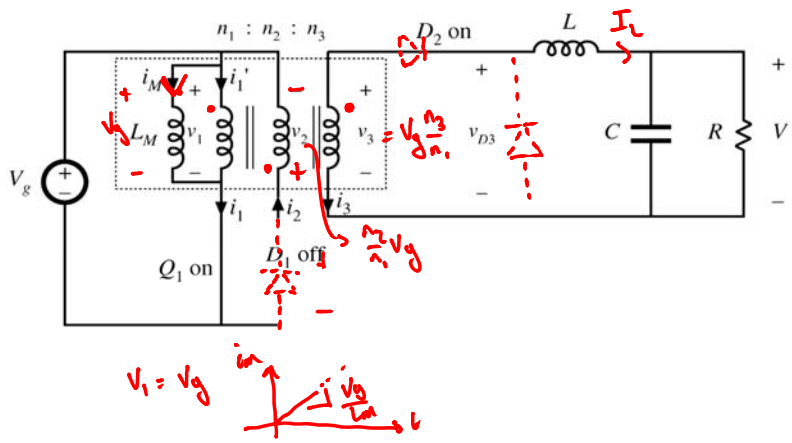

Subinterval 2

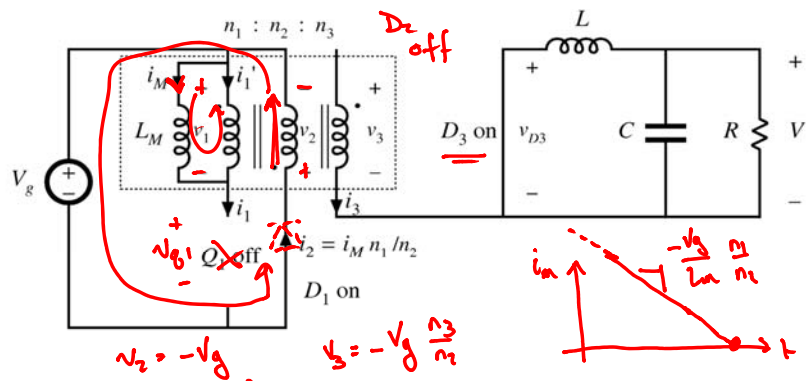

$v_2 = -V_g$

$v_1 = -V_g \frac{n_1}{n_2}$

$v_3 = -V_g \frac{n_3}{n_2}$

$v_{g1} = V_g + |v_1|$

$= V_g + V_g \frac{n_1}{n_2}$

Subinterval 3

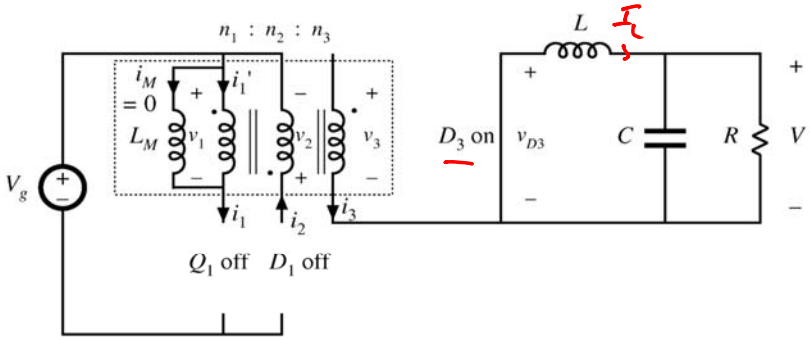

Forward Waveforms

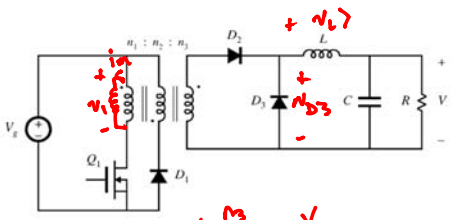

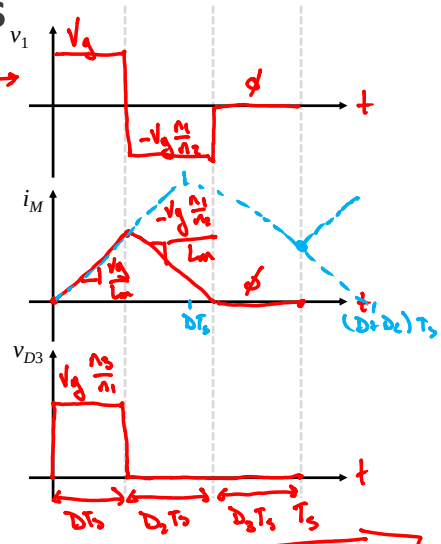

$\langle v_L \rangle = \phi \quad D V_g \frac{n_3}{n} - V$

$$\boxed{M = \frac{V}{V_g} = D \frac{n_3}{n_1}}$$

$\langle v_1 \rangle = \phi = D V_g - D_2 V_g \frac{n_1}{n_2}$

$$\boxed{D_2 = D \frac{n_2}{n_1}}$$

Constraint:

$D + D_2 + D_3 \le 1$

$1 - D - D_2 \ge \phi \rightarrow 1 - D - D\frac{n_2}{n_1} \ge \phi$

$1 - D\left(1 + \frac{n_2}{n_1}\right) \ge \phi \rightarrow \boxed{D \le \frac{1}{1 + \frac{n_2}{n_1}}}$

THE UNIVERSITY OF TENNESSEE KNOXVILLE

Transformer Saturation When D>0.5

magnetizing current waveforms, for $n_1 = n_2$

$D \le \frac{1}{1 + \frac{n_2}{n_1}}$

tradeoff

$V_{g1,pk} = V_g\left(1 + \frac{n_1}{n_2}\right)$

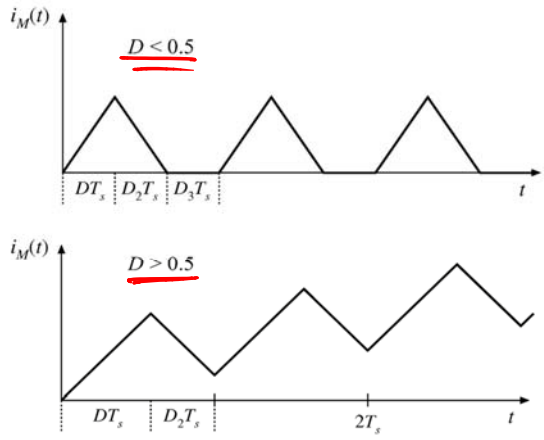

THE UNIVERSITY OF TENNESSEE KNOXVILLE

Two-Transistor Forward Converter

Q_1 & Q_2 operated synchronously

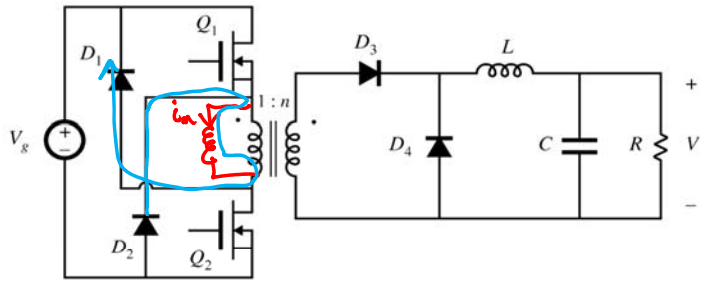

$V = nDV_g$ $\quad D \le \frac{1}{2}$ $\quad \max(v_{Q1}) = \max(v_{Q2}) = V_g$