Announcements

- Midterm due now
- Solutions to be posted on website
- Next Homework Due Friday, October 23rd
- Remote Lecture on Wednesday
- Remote Lectures W/F Oct 21 & 23

Boost Converter Averaged, AC, Linear Circuit Model

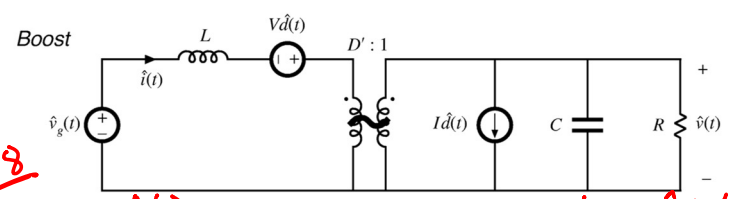

Chapter 8

$G_{vg}(s) = \frac{\hat{v}(s)}{\hat{v}_g(s)}$ → Apply superposition (set $\hat{d} \to \phi$)

$$G_{vd}(s) = \left.\frac{\hat{v}(s)}{\hat{d}(s)}\right|_{\hat{v}_g = \phi} = G_{do} \frac{1 + \frac{s}{\omega_z}}{\left(\frac{s}{\omega_0}\right)^2 + \frac{s}{Q\omega_0} + 1}$$

Model Simulation

full switching model

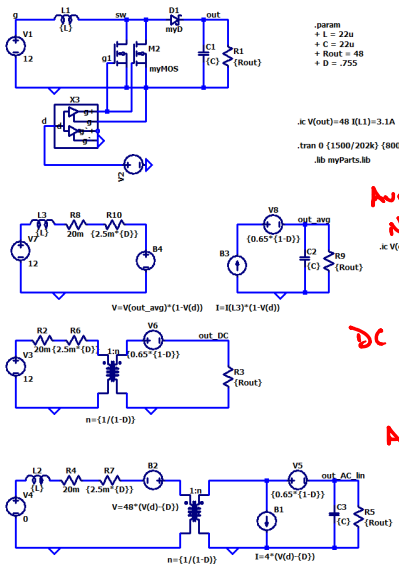

Averaged, Nonlinear

DC equivalent circuit

AC equivalent circuit

① Averaging:

$$\langle v_L \rangle_{T_s} = \langle v_g \rangle_{T_s} - d'(t)\langle v \rangle_{T_s}$$

$$\langle i_c \rangle_{T_s} = -\frac{\langle v \rangle_{T_s}}{R} + d'(t)\langle i_L \rangle_{T_s}$$

linearizing @ DC bias

$$L\frac{d\hat{i}_L}{dt} = \hat{v}_g - D'\hat{v} + V\hat{d}$$

$$C\frac{d\hat{v}}{dt} = \hat{v}\left(\frac{-1}{R}\right) + \hat{i}_L(D') + \hat{d}(-I_L)$$

Model Comparison

Sim step 5% step in D

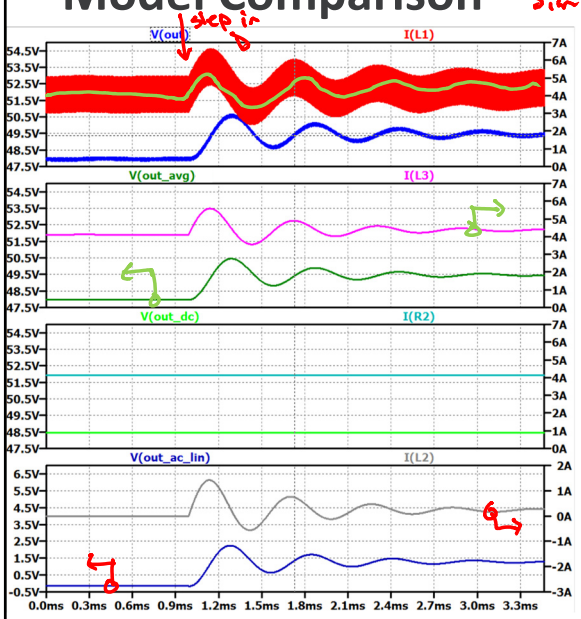

full switching

Averaged, nonlinear

DC model

AC model

Buck Boost AC Modeling

Averaged Equations

$$L\frac{d\langle i_L\rangle}{dt} = d(t)\langle v_g\rangle + d'(t)\langle v\rangle$$

$$C\frac{d\langle v\rangle}{dt} = \frac{-\langle v\rangle}{R} - d'(t)\langle i_L\rangle$$

$$\langle i_g\rangle = d(t)\langle i_L\rangle$$

Buck-boost converter example

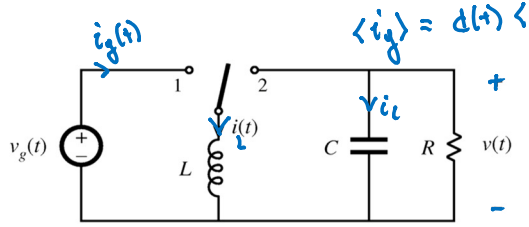

Taylor Series Linearization:

$$L\frac{d\langle i_L\rangle}{dt} = d(t)\langle v_g\rangle + \overset{(1-d(t))}{d'(t)}\langle v\rangle = f(d, v_g, v)$$

$$L\frac{d\hat{i}_L}{dt} = \hat{v}_g\left.\frac{\partial f}{\partial v_g}\right|_{DC} + \hat{v}\left.\frac{\partial f}{\partial v}\right|_{DC} + \hat{d}\left.\frac{\partial f}{\partial d}\right|_{DC}$$

2 $$\boxed{L\frac{d\hat{i}_L}{dt} = \hat{v}_g D + \hat{v} D' + \hat{d}(V_g - V)}$$

3 $$\boxed{C\frac{d\hat{v}}{dt} = \hat{v}\left(\frac{-1}{R}\right) + \hat{i}_L(-D') + \hat{d} I_L}$$

1 $$\boxed{\hat{i}_g = D\hat{i}_L + I_L\hat{d}}$$

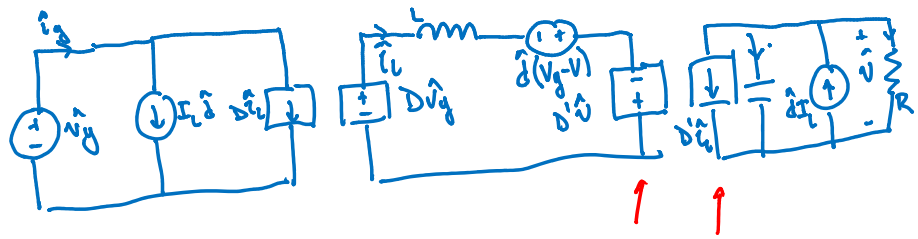

Buck-Boost Small-Signal AC Equivalent Circuit

Buck-boost

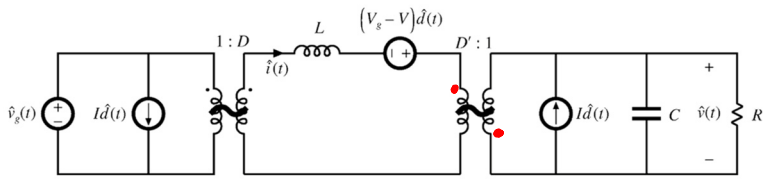

7.2.9: Nonideal Flyback Modeling

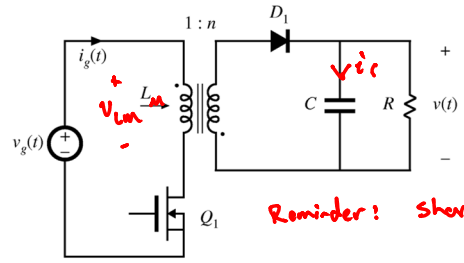

- MOSFET has on-resistance R_{on}
- Flyback transformer has magnetizing inductance L_m referred to primary

Reminder: shorthand $\langle x \rangle = \langle x(t) \rangle_{T_s}$

① Average equations:

$$\langle v_{Lm} \rangle = L \frac{d\langle i_{Lm} \rangle}{dt} = d(t)\left[\langle v_g \rangle - \langle i_{Lm} \rangle R_{on}\right] - d'(t)\frac{\langle v \rangle}{n}$$

$$\langle i_c \rangle = C \frac{d\langle v \rangle}{dt} = -\frac{\langle v \rangle}{R} + d'(t)\langle i_{Lm} \rangle \frac{1}{n}$$

$$\langle i_g \rangle = d(t)\langle i_{Lm} \rangle$$

THE UNIVERSITY OF TENNESSEE KNOXVILLE

Inductor Waveforms

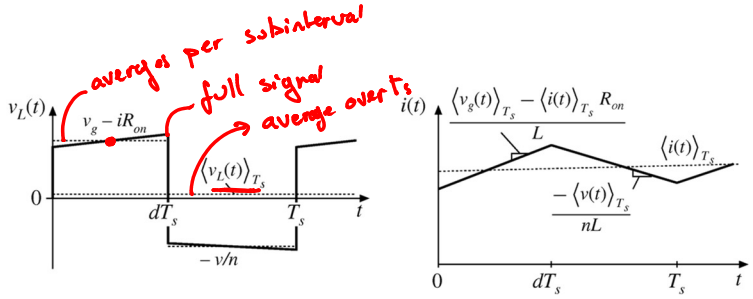

Average inductor voltage:

$$\langle v_L(t) \rangle_{T_s} = d(t)\left(\langle v_g(t) \rangle_{T_s} - \langle i(t) \rangle_{T_s} R_{on}\right) + d'(t)\left(\frac{-\langle v(t) \rangle_{T_s}}{n}\right)$$

Hence, we can write:

$$L\frac{d\langle i(t) \rangle_{T_s}}{dt} = d(t)\langle v_g(t) \rangle_{T_s} - d(t)\langle i(t) \rangle_{T_s} R_{on} - d'(t)\frac{\langle v(t) \rangle_{T_s}}{n}$$

THE UNIVERSITY OF TENNESSEE KNOXVILLE

Capacitor Waveforms

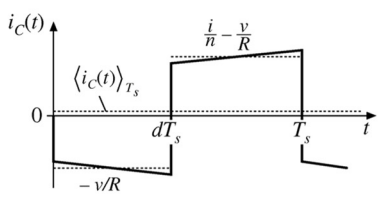

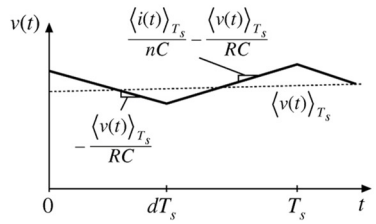

Average capacitor current:

$$\langle i_C(t) \rangle_{T_s} = d(t) \left(\frac{-\langle v(t) \rangle_{T_s}}{R} \right) + d'(t) \left(\frac{\langle i(t) \rangle_{T_s}}{n} - \frac{\langle v(t) \rangle_{T_s}}{R} \right)$$

Hence, we can write:

$$C \frac{d \langle v(t) \rangle_{T_s}}{dt} = d'(t) \frac{\langle i(t) \rangle_{T_s}}{n} - \frac{\langle v(t) \rangle_{T_s}}{R}$$

Input Current Waveform

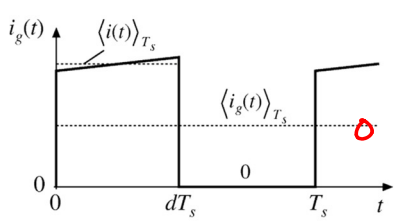

Average input current:

$$\langle i_g(t) \rangle_{T_s} = d(t) \langle i(t) \rangle_{T_s}$$

Flyback Linearization

$$L\frac{d\langle i_{Lm}\rangle}{dt} = d(t)\left[\langle v_g\rangle - \langle i_{Lm}\rangle R_{on}\right] - d'(t)\frac{\langle v\rangle}{n}$$

AC: $$\boxed{L\frac{d\hat{i}_{Lm}}{dt} = \hat{v}_g D - \hat{i}_{Lm} D R_{on} - \hat{v}\frac{D'}{n} + \hat{d}\left(V_g + \frac{V}{n} - I_{Lm}R_{on}\right)}$$

$$C\frac{d\langle v\rangle}{dt} = -\frac{\langle v\rangle}{R} + d'(t)\frac{\langle i_{Lm}\rangle}{n}$$

AC: $$\boxed{C\frac{d\hat{v}}{dt} = \hat{v}\left(\frac{-1}{R}\right) + \hat{i}_{Lm}\frac{D'}{n} - \hat{d}\frac{I_{Lm}}{n}}$$

$$\langle i_g\rangle = d(t)\langle i_{Lm}\rangle$$

AC: $$\boxed{\hat{i}_g = \hat{d}I_{Lm} + D\hat{i}_{Lm}}$$

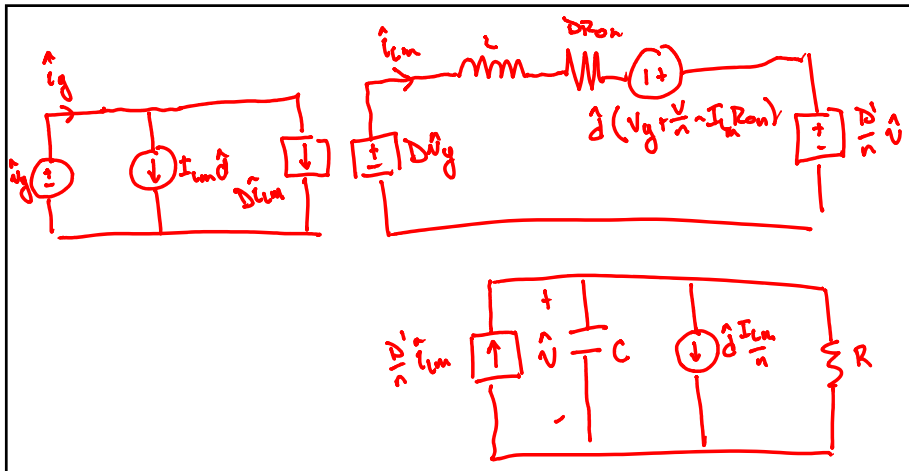

Flyback Equivalent Circuit Model

Flyback AC Model

Combine circuits:

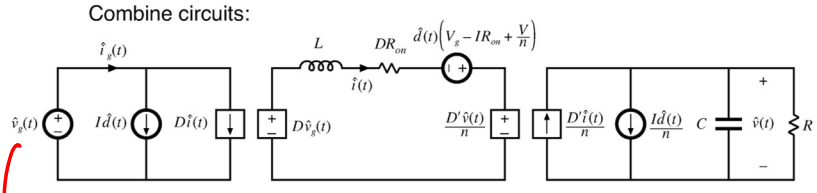

Replace dependent sources with ideal transformers:

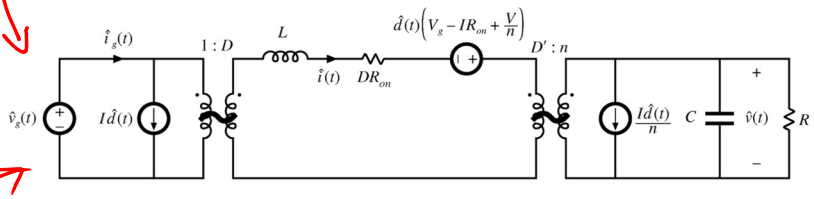

Fundamentals of Power Electronics 65 *Chapter 7: AC equivalent circuit modeling*

Remainder of Chapter 7

understand & Apply

Just exposure

7.1 Introduction

7.2 The basic AC modeling approach

7.3 State-space averaging

7.4 Circuit averaging and averaged switch modeling

7.5 The canonical circuit model

7.6 Modeling the pulse-width modulator

7.7 Summary of key points

7.3: State Space Modeling of Buck Boost

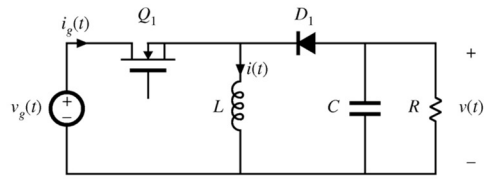

Model nonidealities:

- MOSFET on-resistance R_{on}
- Diode forward voltage drop V_D

state vector	input vector	output vector
$\mathbf{x}(t) = \begin{bmatrix} i(t) \\ v(t) \end{bmatrix}$	$\mathbf{u}(t) = \begin{bmatrix} v_g(t) \\ V_D \end{bmatrix}$	$\mathbf{y}(t) = \begin{bmatrix} i_g(t) \end{bmatrix}$

whatever you want to solve

Model in Subinterval 1

$$L\frac{di(t)}{dt} = v_g(t) - i(t)\,R_{on}$$
$$C\frac{dv(t)}{dt} = -\frac{v(t)}{R}$$
$$i_g(t) = i(t)$$

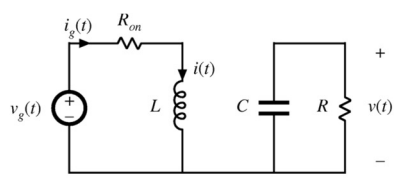

$$\underbrace{\begin{bmatrix} L & 0 \\ 0 & C \end{bmatrix}}_{\mathbf{K}} \underbrace{\frac{d}{dt}\begin{bmatrix} i(t) \\ v(t) \end{bmatrix}}_{\frac{d\mathbf{x}(t)}{dt}} = \underbrace{\begin{bmatrix} -R_{on} & 0 \\ 0 & -\frac{1}{R} \end{bmatrix}}_{\mathbf{A}_1} \underbrace{\begin{bmatrix} i(t) \\ v(t) \end{bmatrix}}_{\mathbf{x}(t)} + \underbrace{\begin{bmatrix} 1 & 0 \\ 0 & 0 \end{bmatrix}}_{\mathbf{B}_1} \underbrace{\begin{bmatrix} v_g(t) \\ V_D \end{bmatrix}}_{\mathbf{u}(t)}$$

$$\underbrace{\begin{bmatrix} i_g(t) \end{bmatrix}}_{\mathbf{y}(t)} = \underbrace{\begin{bmatrix} 1 & 0 \end{bmatrix}}_{\mathbf{C}_1} \underbrace{\begin{bmatrix} i(t) \\ v(t) \end{bmatrix}}_{\mathbf{x}(t)} + \underbrace{\begin{bmatrix} 0 & 0 \end{bmatrix}}_{\mathbf{E}_1} \underbrace{\begin{bmatrix} v_g(t) \\ V_D \end{bmatrix}}_{\mathbf{u}(t)}$$

Model in Subinterval 2

$$L\frac{di(t)}{dt} = v(t) - V_D$$
$$C\frac{dv(t)}{dt} = -\frac{v(t)}{R} - i(t)$$
$$i_g(t) = 0$$

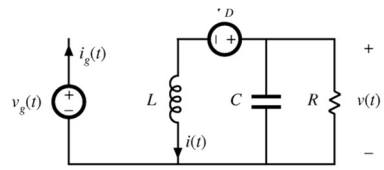

$$\underbrace{\begin{bmatrix} L & 0 \\ 0 & C \end{bmatrix}}_{\mathbf{K}} \underbrace{\frac{d}{dt}\begin{bmatrix} i(t) \\ v(t) \end{bmatrix}}_{\frac{d\mathbf{x}(t)}{dt}} = \underbrace{\begin{bmatrix} 0 & 1 \\ -1 & -\frac{1}{R} \end{bmatrix}}_{\mathbf{A}_2} \underbrace{\begin{bmatrix} i(t) \\ v(t) \end{bmatrix}}_{\mathbf{x}(t)} + \underbrace{\begin{bmatrix} 0 & -1 \\ 0 & 0 \end{bmatrix}}_{\mathbf{B}_2} \underbrace{\begin{bmatrix} v_g(t) \\ V_D \end{bmatrix}}_{\mathbf{u}(t)}$$

$$\underbrace{\begin{bmatrix} i_g(t) \end{bmatrix}}_{\mathbf{y}(t)} = \underbrace{\begin{bmatrix} 0 & 0 \end{bmatrix}}_{\mathbf{C}_2} \underbrace{\begin{bmatrix} i(t) \\ v(t) \end{bmatrix}}_{\mathbf{x}(t)} + \underbrace{\begin{bmatrix} 0 & 0 \end{bmatrix}}_{\mathbf{E}_2} \underbrace{\begin{bmatrix} v_g(t) \\ V_D \end{bmatrix}}_{\mathbf{u}(t)}$$

DC Solution

DC state equations:

$$\begin{bmatrix} 0 \\ 0 \end{bmatrix} = \begin{bmatrix} -DR_{on} & D' \\ -D' & -\frac{1}{R} \end{bmatrix} \begin{bmatrix} I \\ V \end{bmatrix} + \begin{bmatrix} D & -D' \\ 0 & 0 \end{bmatrix} \begin{bmatrix} V_g \\ V_D \end{bmatrix}$$

$$\begin{bmatrix} I_g \end{bmatrix} = \begin{bmatrix} D & 0 \end{bmatrix} \begin{bmatrix} I \\ V \end{bmatrix} + \begin{bmatrix} 0 & 0 \end{bmatrix} \begin{bmatrix} V_g \\ V_D \end{bmatrix}$$

Corresponding equivalent circuit:

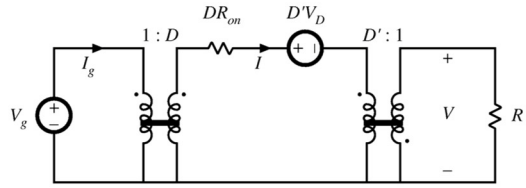

AC Solution

Evaluate matrices in small-signal model:

$$\left(\mathbf{A}_1 - \mathbf{A}_2\right)\mathbf{X} + \left(\mathbf{B}_1 - \mathbf{B}_2\right)\mathbf{U} = \begin{bmatrix} -V \\ I \end{bmatrix} + \begin{bmatrix} V_g - IR_{on} + V_D \\ 0 \end{bmatrix} = \begin{bmatrix} V_g - V - IR_{on} + V_D \\ I \end{bmatrix}$$

$$\left(\mathbf{C}_1 - \mathbf{C}_2\right)\mathbf{X} + \left(\mathbf{E}_1 - \mathbf{E}_2\right)\mathbf{U} = \left[I\right]$$

Small-signal ac state equations:

$$\begin{bmatrix} L & 0 \\ 0 & C \end{bmatrix} \frac{d}{dt} \begin{bmatrix} \hat{i}(t) \\ \hat{v}(t) \end{bmatrix} = \begin{bmatrix} -DR_{on} & D' \\ -D' & -\frac{1}{R} \end{bmatrix} \begin{bmatrix} \hat{i}(t) \\ \hat{v}(t) \end{bmatrix} + \begin{bmatrix} D & -D' \\ 0 & 0 \end{bmatrix} \begin{bmatrix} \hat{v}_g(t) \\ \cancel{\hat{v}_D(t)}\,0 \end{bmatrix} + \begin{bmatrix} V_g - V - IR_{on} + V_D \\ I \end{bmatrix} \hat{d}(t)$$

$$\left[\hat{i}_g(t)\right] = \begin{bmatrix} D & 0 \end{bmatrix} \begin{bmatrix} \hat{i}(t) \\ \hat{v}(t) \end{bmatrix} + \begin{bmatrix} 0 & 0 \\ 0 & 0 \end{bmatrix} \begin{bmatrix} \hat{v}_g(t) \\ \cancel{\hat{v}_D(t)}\,0 \end{bmatrix} + \begin{bmatrix} 0 \\ I \end{bmatrix} \hat{d}(t)$$

Resulting AC Equations

Small-signal ac equations, in scalar form:

$$L\frac{d\hat{i}(t)}{dt} = D'\,\hat{v}(t) - DR_{on}\,\hat{i}(t) + D\,\hat{v}_g(t) + \left(V_g - V - IR_{on} + V_D\right)\hat{d}(t)$$

$$C\frac{d\hat{v}(t)}{dt} = -D'\,\hat{i}(t) - \frac{\hat{v}(t)}{R} + I\,\hat{d}(t)$$

$$\hat{i}_g(t) = D\,\hat{i}(t) + I\,\hat{d}(t)$$

Corresponding equivalent circuits:

inductor equation

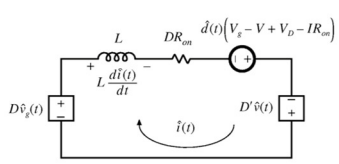

input eqn

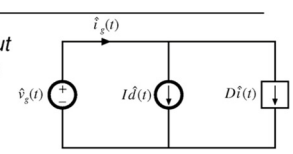

capacitor eqn

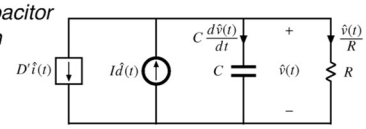

AC Equivalent Circuit Model

Combine individual circuits to obtain

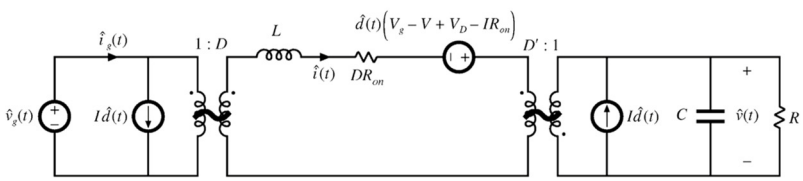

7.4: Averaged Switch Modeling

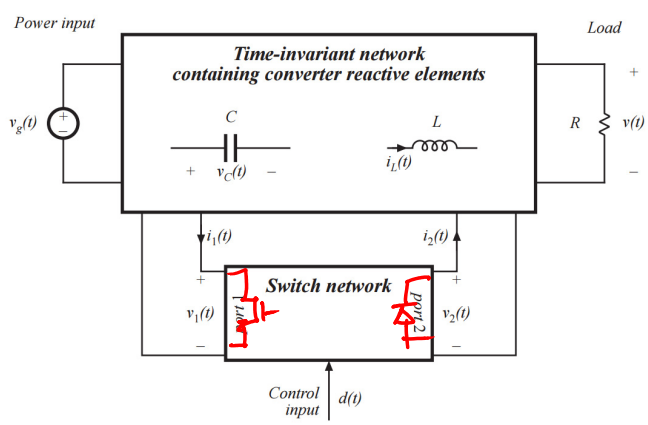

Averaged Switch Network

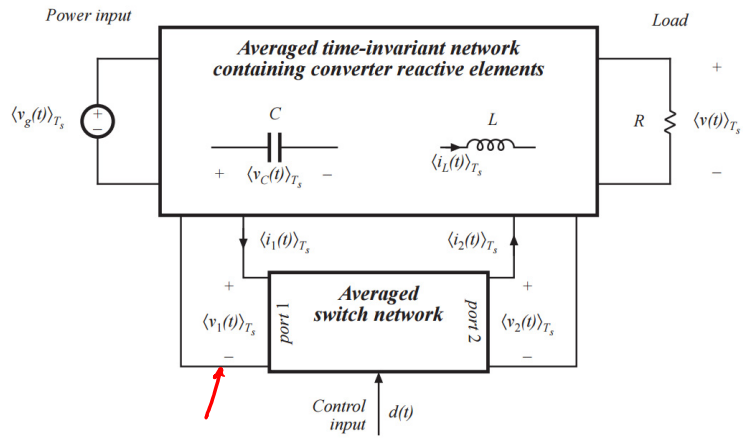

Definition of Equivalent Sources

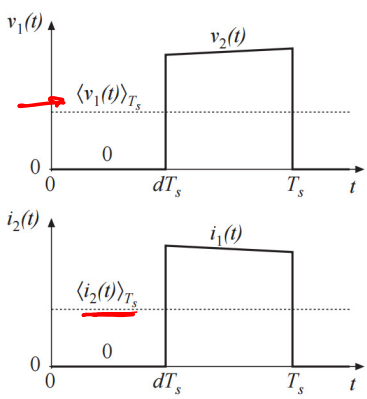

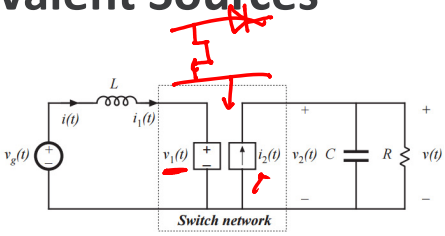

The waveforms of the dependent generators are defined to be identical to the actual terminal waveforms of the switch network.

The circuit is therefore electrical identical to the original converter.

So far, no approximations have been made.

Switch Averaging

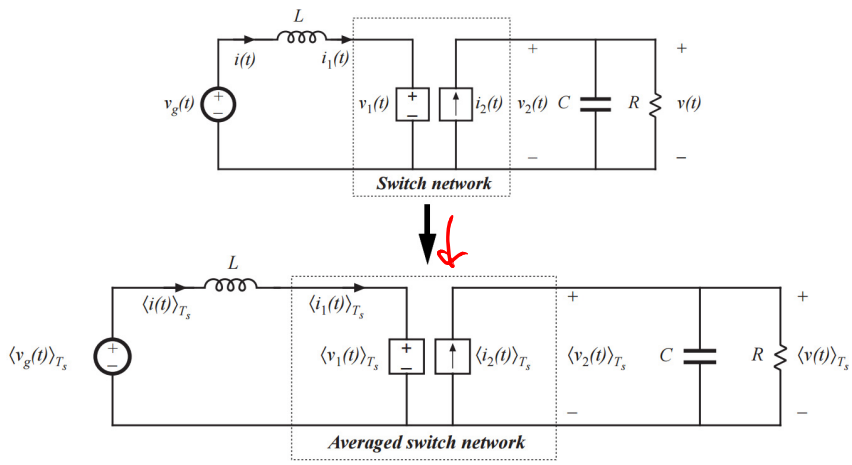

Computation of Average Values

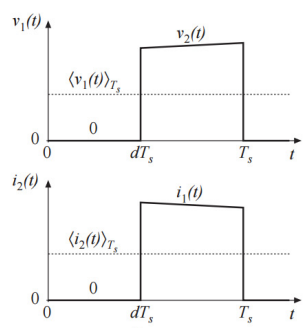

Average the waveforms of the dependent sources:

$$\langle v_1(t)\rangle_{T_s} = d'(t)\,\langle v_2(t)\rangle_{T_s}$$

$$\langle i_2(t)\rangle_{T_s} = d'(t)\,\langle i_1(t)\rangle_{T_s}$$

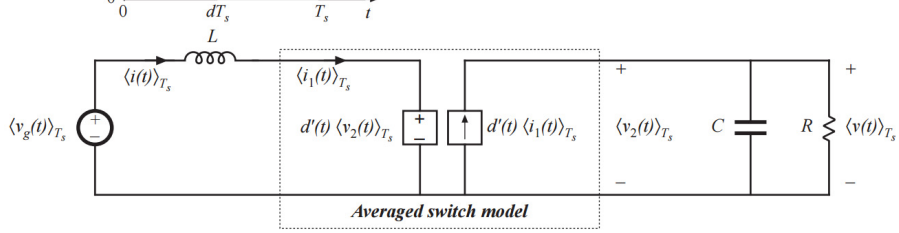

Linearization of Model

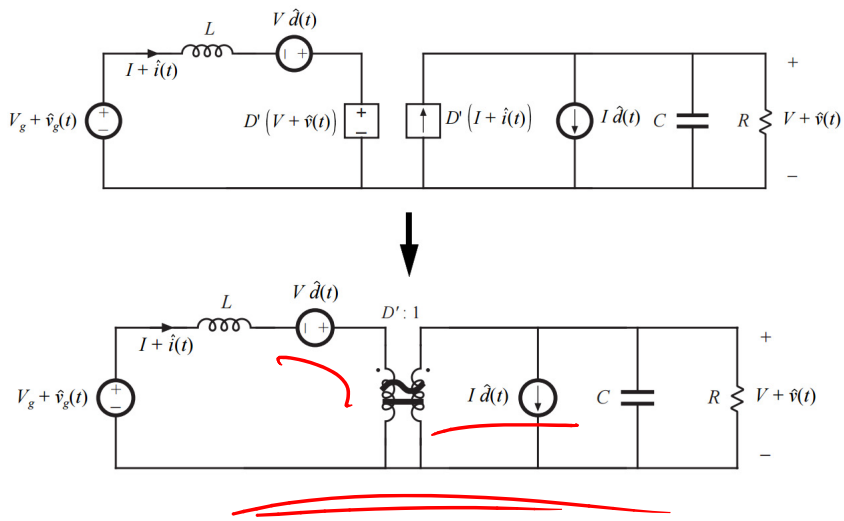

Averaged Switch Cells

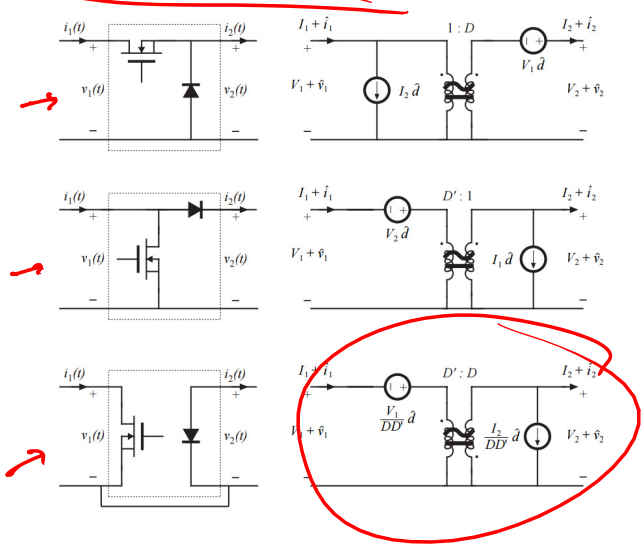

see also

Appendix 3
Averaged switch modeling of a CCM SEPIC

7.5: Canonical Circuit Model

All PWM CCM dc-dc converters perform the same basic functions:

- Transformation of voltage and current levels, ideally with 100% efficiency
- Low-pass filtering of waveforms
- Control of waveforms by variation of duty cycle

Hence, we expect their equivalent circuit models to be qualitatively similar.

Canonical model:

- A standard form of equivalent circuit model, which represents the above physical properties
- Plug in parameter values for a given specific converter

THE UNIVERSITY OF TENNESSEE KNOXVILLE

Development of Canonical Model: DC

1. Transformation of dc voltage and current levels
   - modeled as in Chapter 3 with ideal dc transformer
   - effective turns ratio $M(D)$
   - can refine dc model by addition of effective loss elements, as in Chapter 3

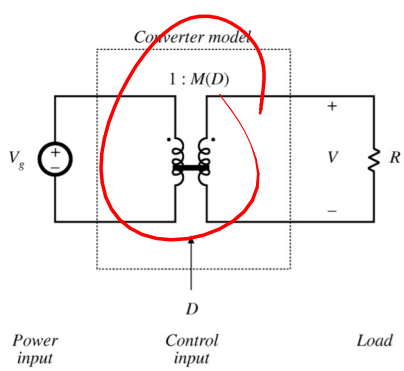

THE UNIVERSITY OF TENNESSEE KNOXVILLE

Direct AC Response

2. Ac variations in $v_g(t)$ induce ac variations in $v(t)$
   - these variations are also transformed by the conversion ratio $M(D)$

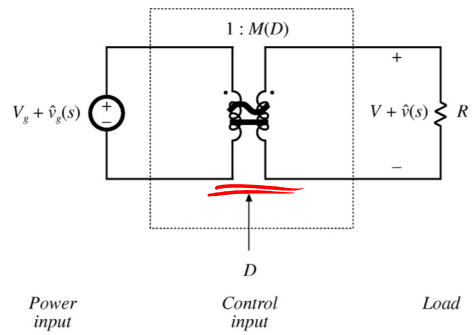

Filtering Elements

3. Converter must contain an effective low-pass filter characteristic
   - necessary to filter switching ripple
   - also filters ac variations
   - effective filter elements may not coincide with actual element values, but can also depend on operating point

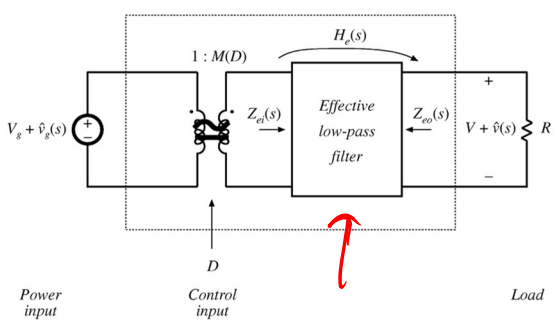

Control Response

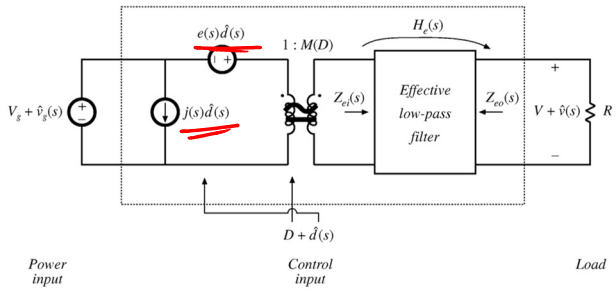

4. Control input variations also induce ac variations in converter waveforms

- Independent sources represent effects of variations in duty cycle
- Can push all sources to input side as shown. Sources may then become frequency-dependent

Solving Transfer Functions

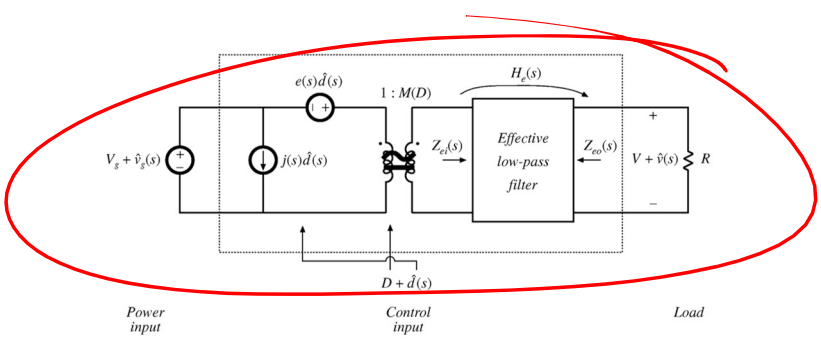

Line-to-output transfer function: $G_{vg}(s) = \dfrac{\hat{v}(s)}{\hat{v}_g(s)} = M(D)\, H_e(s)$

Control-to-output transfer function: $G_{vd}(s) = \dfrac{\hat{v}(s)}{\hat{d}(s)} = e(s)\, M(D)\, H_e(s)$

Example: Buck Boost Model

Small-signal ac model of the buck-boost converter

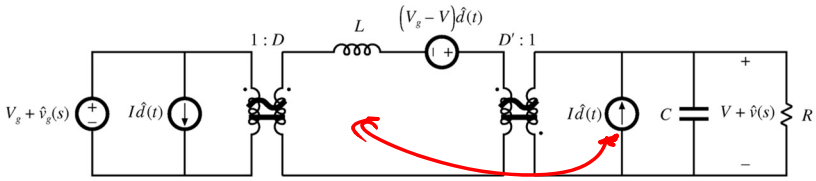

- Push independent sources to input side of transformers
- Push inductor to output side of transformers
- Combine transformers

Buck-Boost in Canonical Form

Push voltage source through 1:*D* transformer, and combine with existing input-side transformer.

Combine series-connected transformers.

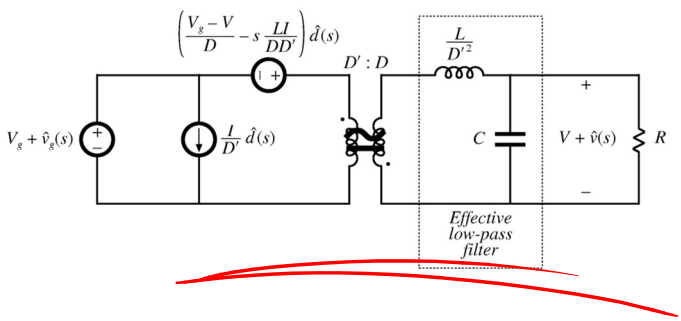

Canonical Form of Basic Converters

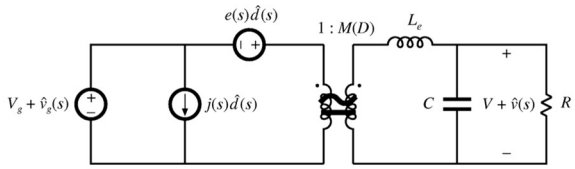

Table 7.1. Canonical model parameters for the ideal buck, boost, and buck-boost converters

Converter	$M(D)$	L_e	$e(s)$	$j(s)$
Buck	D	L	$\frac{V}{D^2}$	$\frac{V}{R}$
Boost	$\frac{1}{D'}$	$\frac{L}{D'^2}$	$V\left(1 - \frac{sL}{D'^2 R}\right)$	$\frac{V}{D'^2 R}$
Buck-boost	$-\frac{D}{D'}$	$\frac{L}{D'^2}$	$-\frac{V}{D^2}\left(1 - \frac{sDL}{D'^2 R}\right)$	$-\frac{V}{D'^2 R}$

THE UNIVERSITY OF TENNESSEE KNOXVILLE