Example Design of Buck Compensator

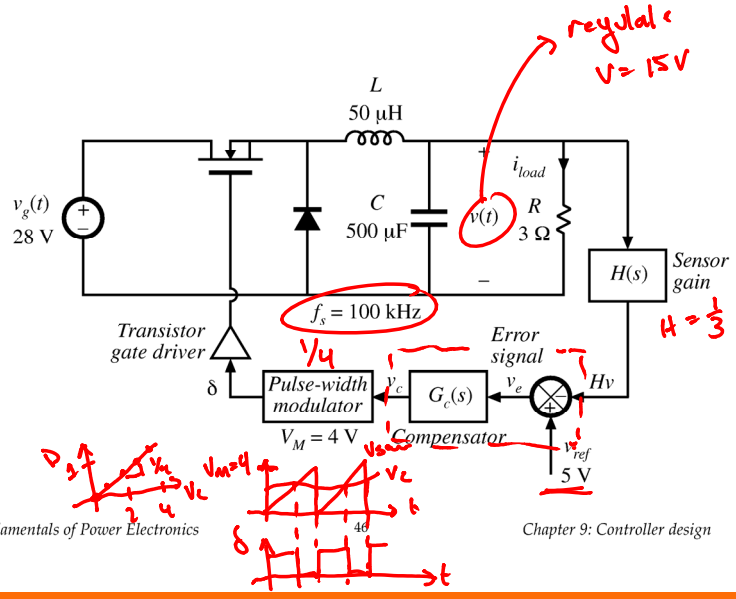

DC (Quiescent) Operating Point

Input voltage	$V_g = 28\text{V}$
Output	$V = 15\text{V}$, $I_{load} = 5\text{A}$, $R = 3\Omega$
Quiescent duty cycle	$D = 15/28 = 0.536$
Reference voltage	$V_{ref} = 5\text{V}$
Quiescent value of control voltage	$V_c = DV_M = 2.14\text{V}$
Gain $H(s)$	$H = V_{ref}/V = 5/15 = 1/3$

AC Power Stage Model

AC, Linear, Average Model of Buck
*Table 7.1

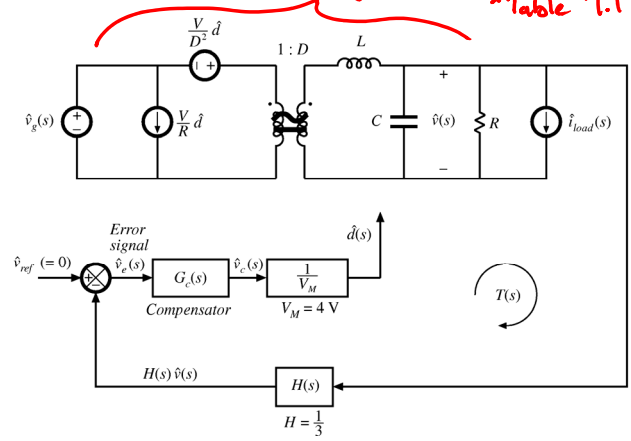

System Block Diagram

$\hat{v} = \hat{v}_{ref}\frac{1}{H}\frac{T}{1+T} + \hat{v}_g G_{vg}\frac{1}{1+T} + \hat{i}_{out} Z_{out}\frac{1}{1+T}$

disturbances

$$T(s) = G_c(s)\left(\frac{1}{V_M}\right)G_{vd}(s)\,H(s)$$

$$T(s) = \frac{G_c(s)\,H(s)}{V_M}\left(\frac{V}{D}\,\frac{1}{1+\frac{s}{Q_0\omega_0}+\left(\frac{s}{\omega_0}\right)^2}\right)$$

first
$G_c = 1$

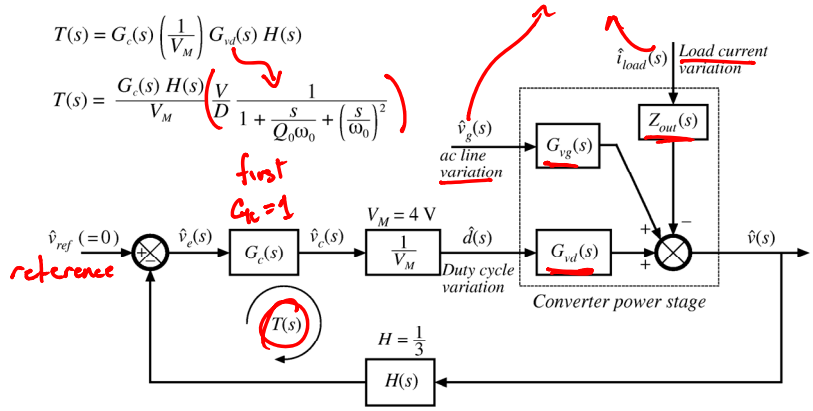

Plotting Uncompensated Loop Gain

(D component)

(1) φ_m too small → Risk instability, Bad transient ringing

(2) LF Gain too low → steady-state error (integral component)

(3) f_c ≈ ok

→ higher f_c will speed up transient response (P component)

With $G_c = 1$, the loop gain is

$$T_u(s) = T_{u0} \frac{1}{1 + \frac{s}{Q_0 \omega_0} + \left(\frac{s}{\omega_0}\right)^2}$$

$$T_{u0} = \frac{H}{D}\frac{V}{V_M} = 2.33 \Rightarrow 7.4\text{dB}$$

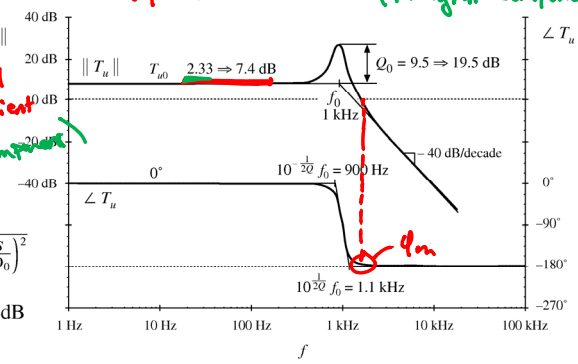

$f_c = 1.8$ kHz, $\varphi_m = 5°$

LTSpice Simulation – AC, Uncompensated

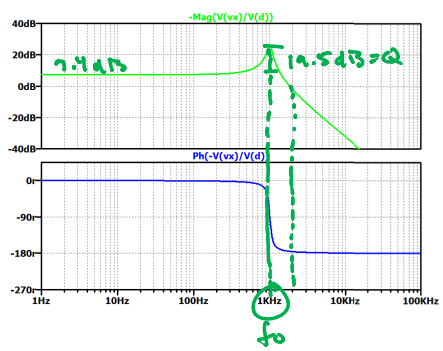


```
.lib myParts.lib
.ac dec 1000 1 1Meg
```

```
.param Vg = 28  V = 15  R = 3  D = .536
.param Vref = 5  H = 1/3  Vm = 4
.param L = 50u C = 500u
```

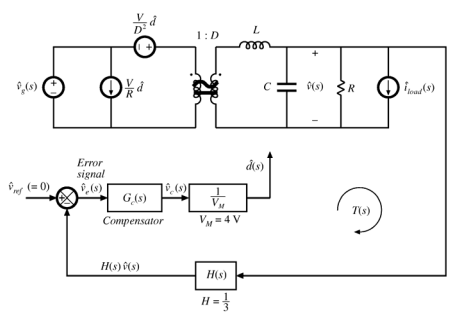

Transient Simulation, Uncompensated

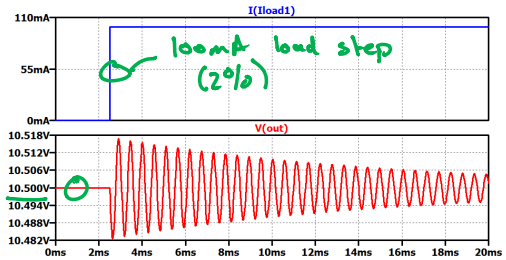

$$V = \frac{V_{ref}}{A}\frac{\|T_o\|}{1+\|T_o\|} = 15\,\frac{2.33}{1+2.33} = 10.5$$

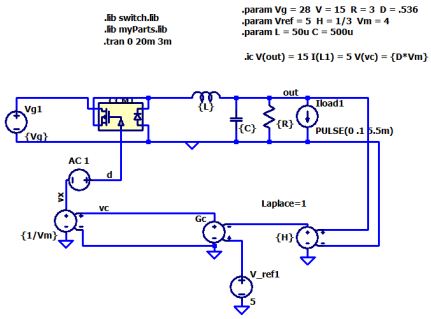

Ringing Frequency

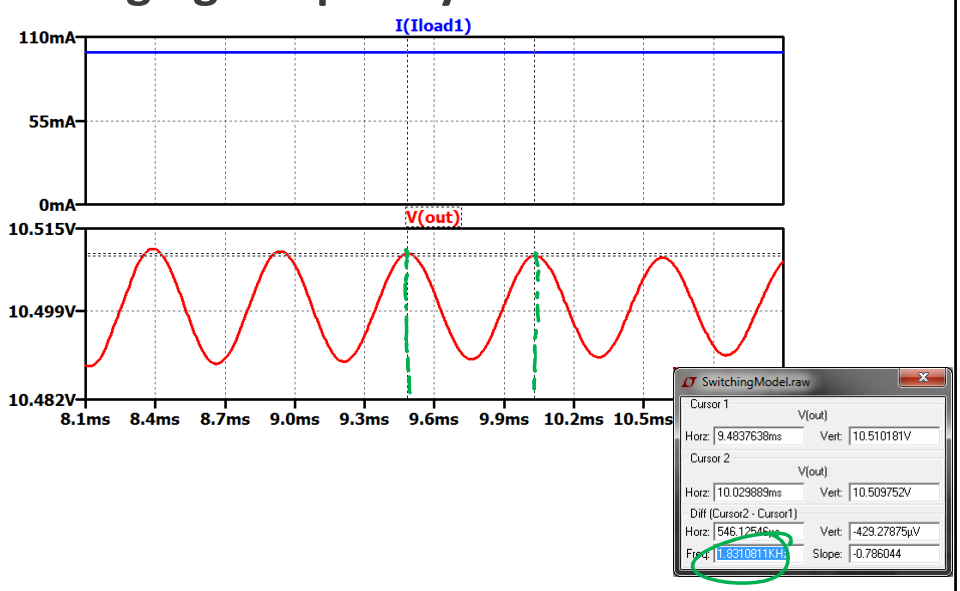

$T/(1+T)$

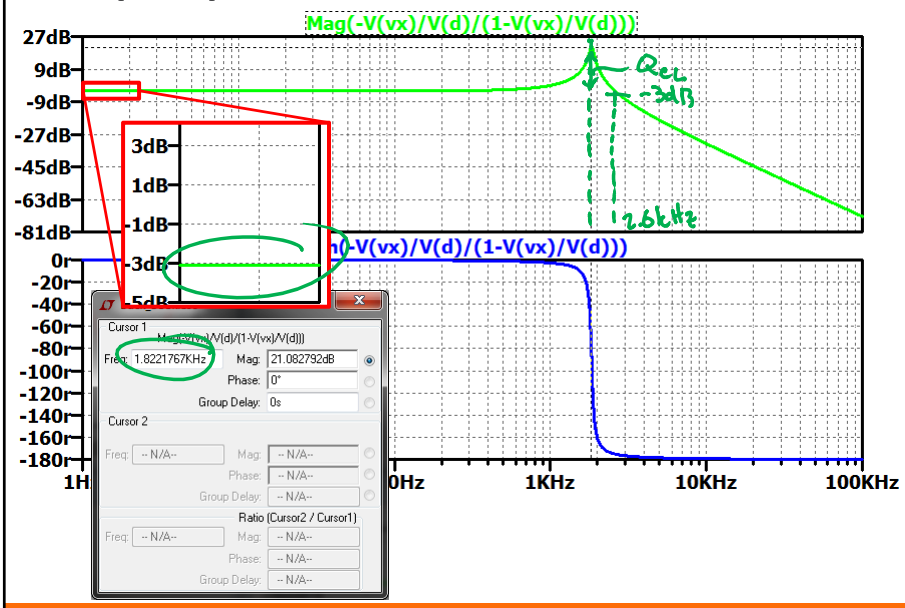

Summary: Uncompensated Behavior

- Significant steady-state error
  - Need to increase low-frequency gain
- Barely stable; significant ringing
  - Need to increase ϕ_m
- Speed: ok
  - f_c = 1.8 kHz
  - $(BW)_{CL}$ = 2.6 kHz
  - OK for $f_s \approx$ 10 kHz or above

Compensator Design

- As an example, try to
  - ✓ – Increase f_c to 10 kHz $= \frac{f_s}{10}$
  - – Increase ϕ_m to 76° (Q_{CL}=0.5)
  - ✓ – Increase $\|T_0\|$ to ∞
- Note: Book Chooses f_c = 5 kHz and ϕ_m =52° (Q=0.5)

PI Design

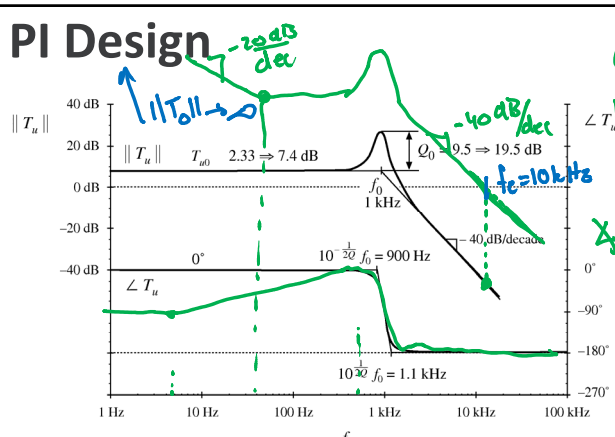

$G_c = G_{c0}\left(1 + \frac{\omega_{zi}}{s}\right)$

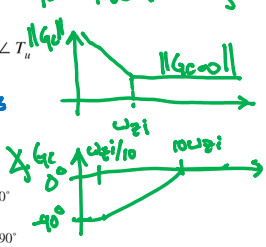

Need f_{zi} << f_c

f_{zi} = 50 Hz

Want G_{c0} = 40 dB/dec * 1dec − 7.4 dB = 32.6 dB = 42.6

$G_c = 42.6\left(1 + \frac{2\pi\, 50\,\text{Hz}}{s}\right)$

PI Simulation

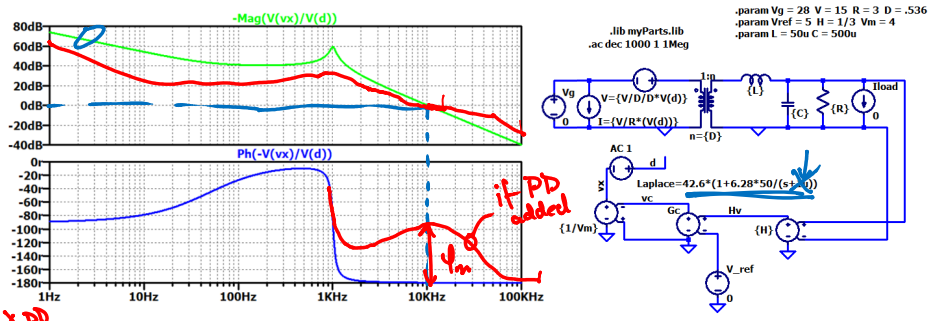

PD Design

$$f_z = f_c \sqrt{\frac{1-\sin(\theta)}{1+\sin(\theta)}}$$

$$f_p = f_c \sqrt{\frac{1+\sin(\theta)}{1-\sin(\theta)}}$$

$\theta = 76^\circ$

$f_c = 10\,kHz$

$$G_{c,PD} = G_{c0} \frac{\left(1+\frac{s}{\omega_z}\right)}{\left(1+\frac{s}{\omega_p}\right)}$$

$$G_{c0} = \sqrt{\frac{f_z}{f_p}}$$

$f_z = 1.23\,kHz$

$f_p = 81\,kHz$

$G_{c0} = 0.12$

PID Simulation

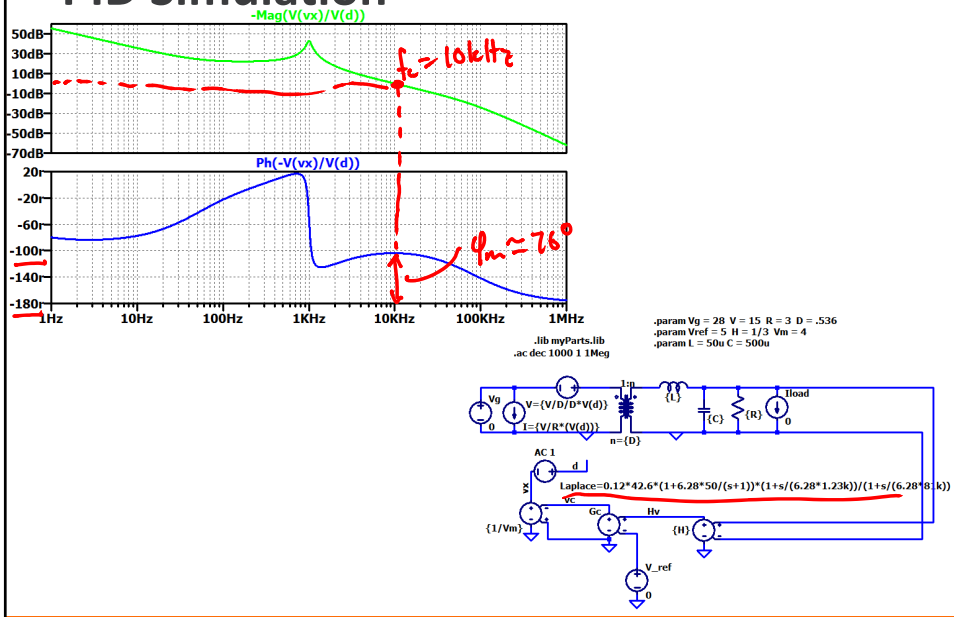

T/(1+*T*)

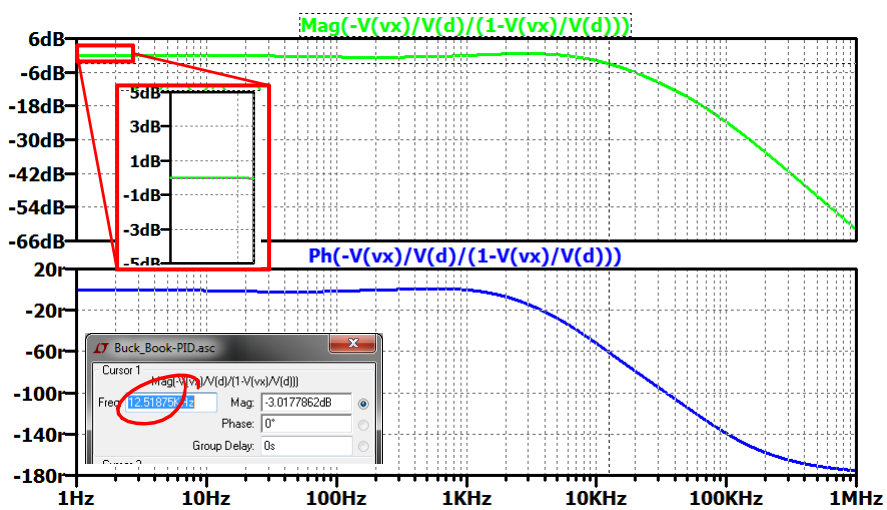

Transient Simulation

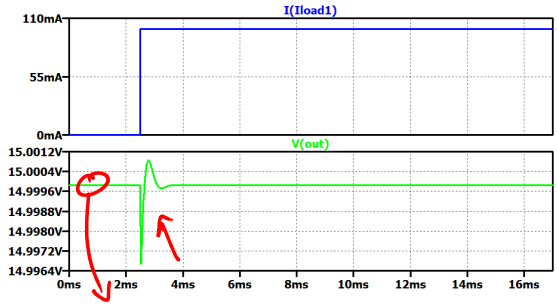

~zero steady-state error

```
.lib switch.lib
.lib myParts.lib
.tran 0 20m 3m
```

```
.param Vg = 28  V = 15  R = 3  D = .536
.param Vref = 5  H = 1/3  Vm = 4
.param L = 50u C = 500u

.ic V(out) = 15 I(L1) = 5 V(vc) = {D*Vm}
```