Full Bridge Converter

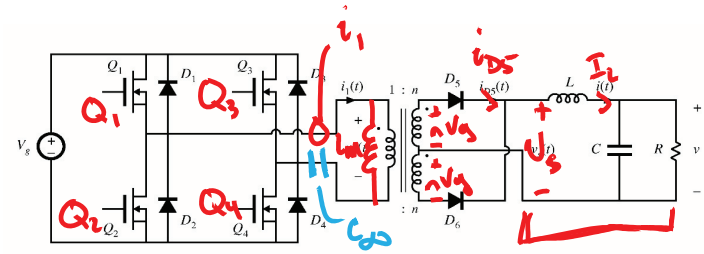

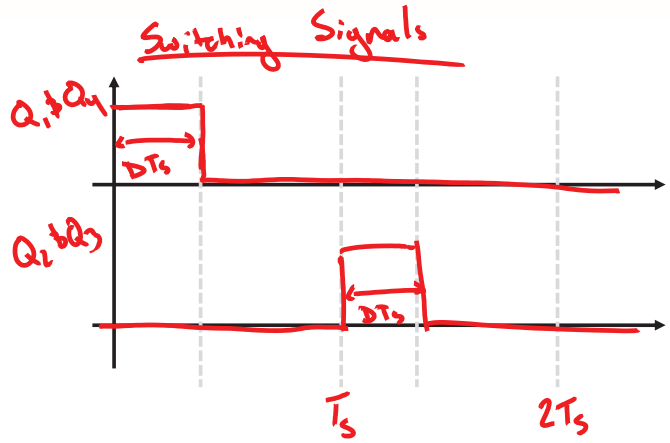

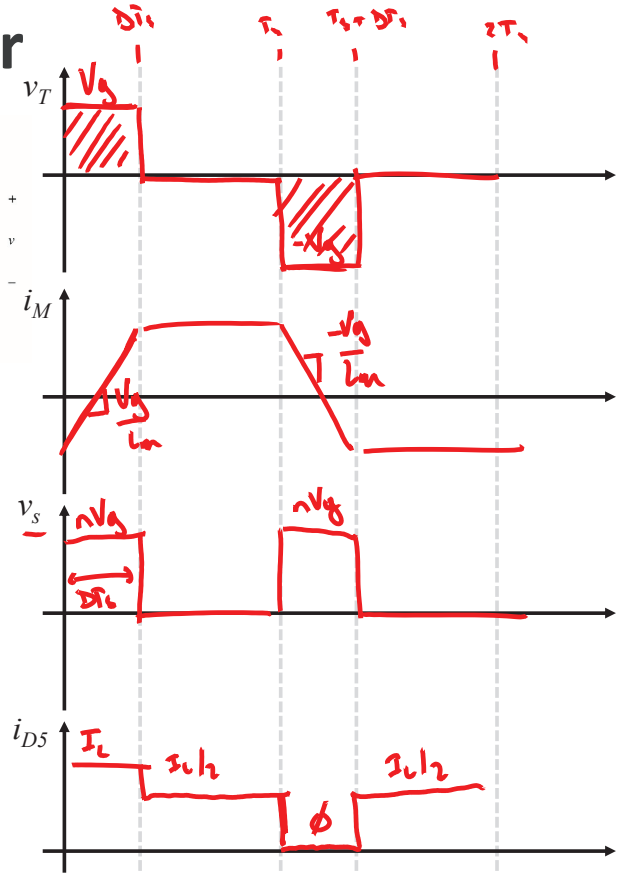

Conversion Ratio

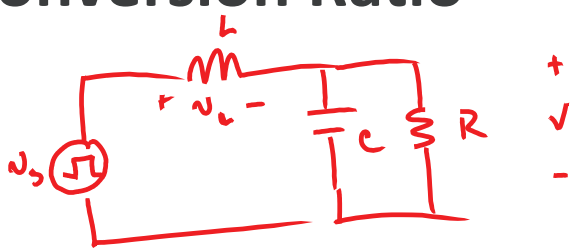

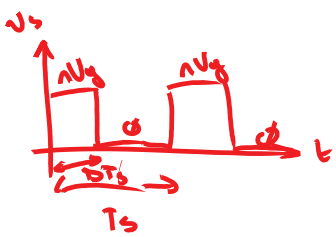

$$\langle v_L \rangle = \phi = \langle v_s - v \rangle$$

$$\phi = DnV_g - V$$

$$V = DnV_g$$

$$\boxed{M(D) = \frac{V}{V_g} = Dn}$$

Control $0 \le D \le 1$

turns ratio

Transformer Saturation

$$\langle v_T \rangle = \frac{1}{2T_s}\left(\cancel{DT_sV_g} - \cancel{DT_sV_g}\right) = \emptyset$$

$$\emptyset = \emptyset$$

- Ideally, V-s balance always satisfied on Lm
- Nonideal case : (1) Conduction loss in Q_1-Q_4 → R_{on1}-R_{on4}
  (2) Timing / control error

$$D_1 = D + \Delta D$$
$$D_2 = D - \Delta D$$

$$\langle v_T \rangle = \frac{1}{2T_s}\left[D_1T_s\left(V_g - nI_L(R_{on1} + R_{on4})\right) - D_2T_s\left(V_g - nI_L(R_{on2} + R_{on3})\right)\right]$$

- Any nonideality may lead to transformer saturation
- Practical implementation may use : (1) current control
  (2) DC blocking Cap

Push Pull Converter

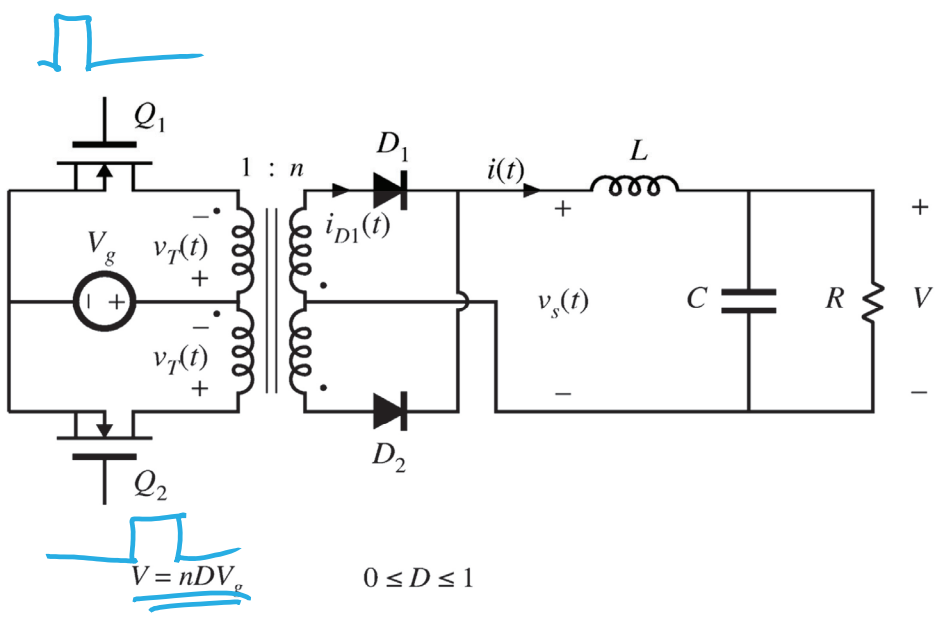

Half Bridge Isolated Buck

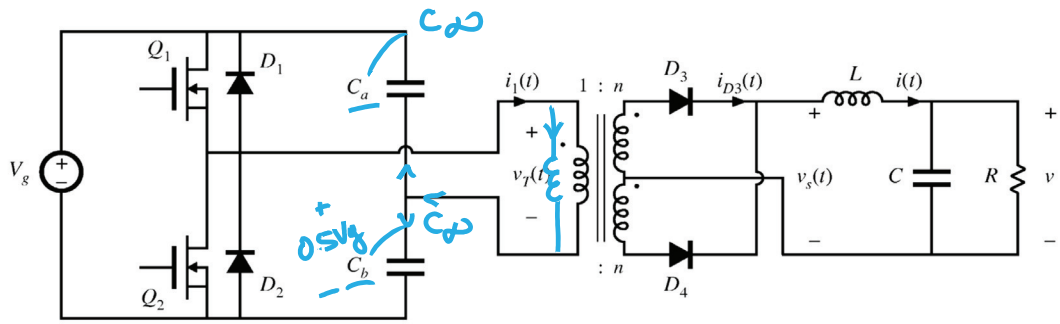

- Replace transistors Q_3 and Q_4 with large capacitors
- Voltage at capacitor centerpoint is $0.5V_g$
- $v_s(t)$ is reduced by a factor of two
- $M = 0.5\,nD$

6.3.2 Forward Converter

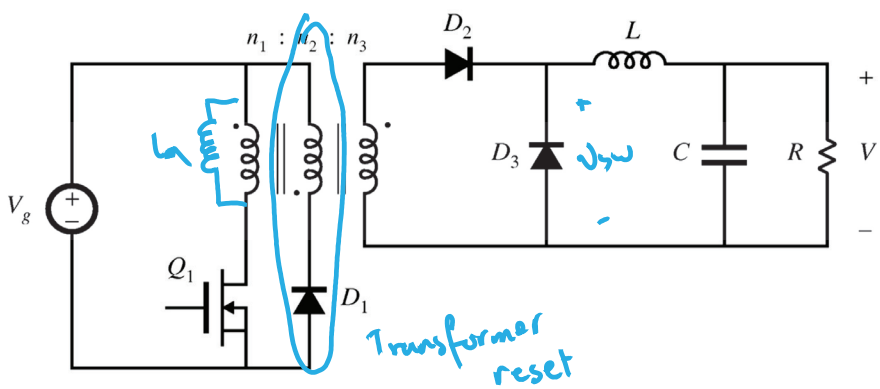

- Buck-derived transformer-isolated converter
- Single-transistor and two-transistor versions
- Maximum duty cycle is limited
- Transformer is reset while transistor is off

Subinterval 1 Q_1 on

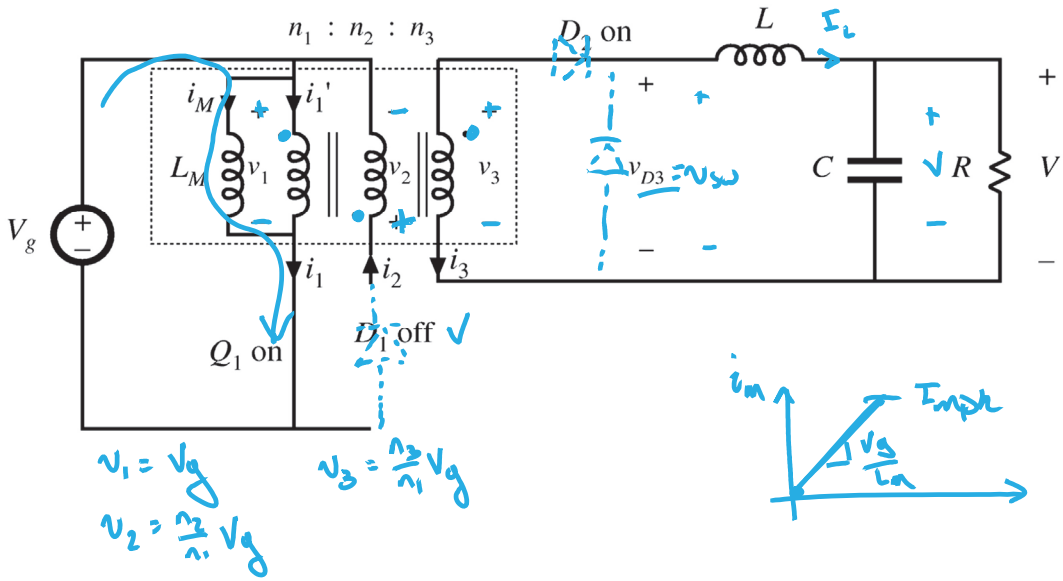

Subinterval 2 → Q_2 off

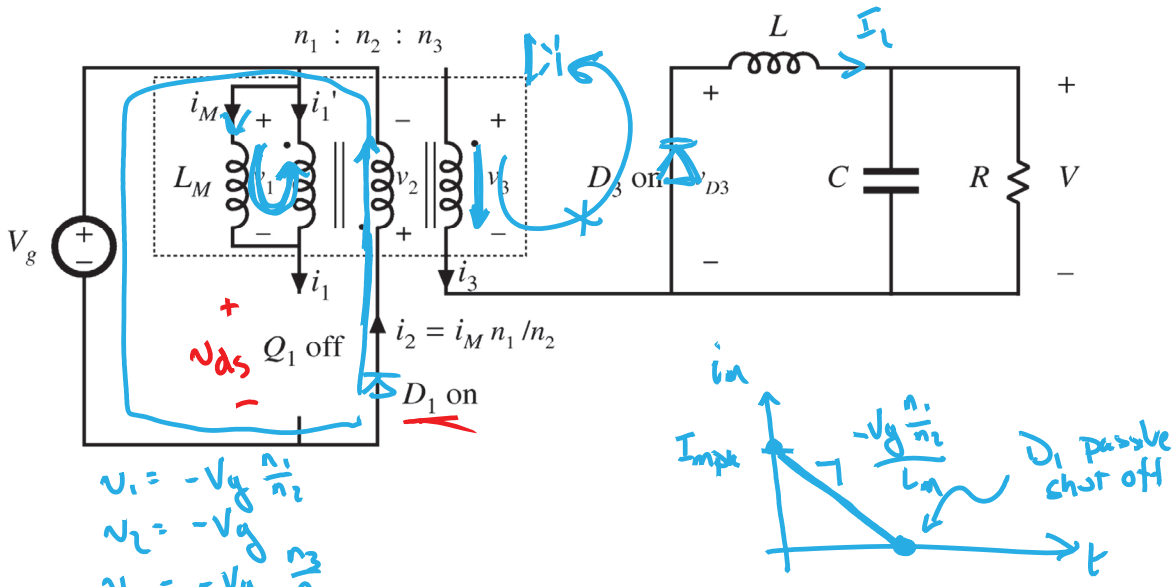

$V_{ds} = V_g - v_1 = V_g\left(1 + \frac{n_1}{n_2}\right)$

Subinterval 3

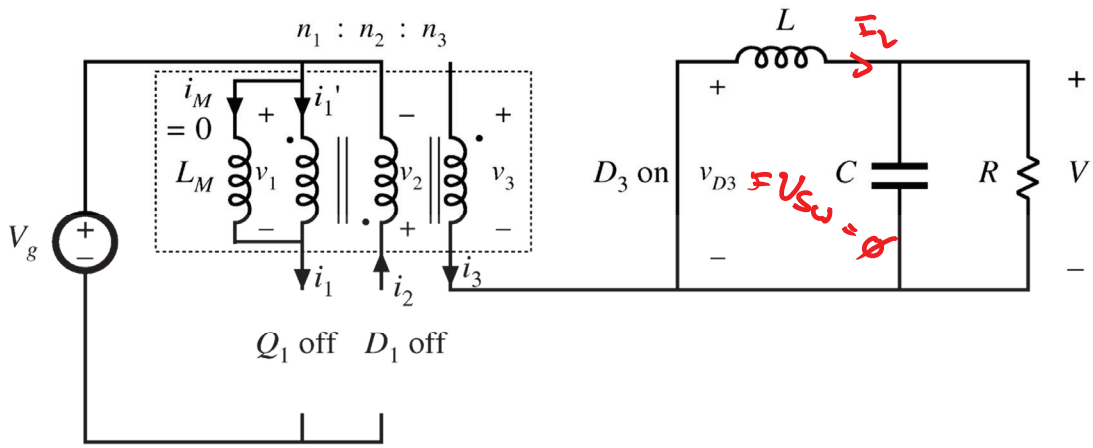

Forward Waveforms

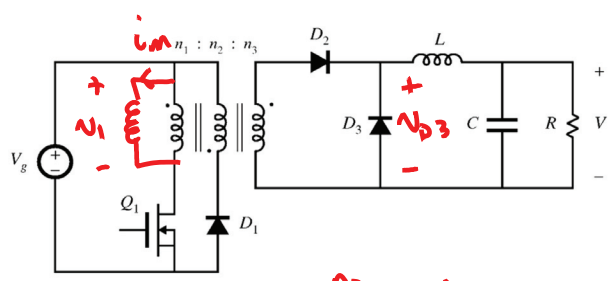

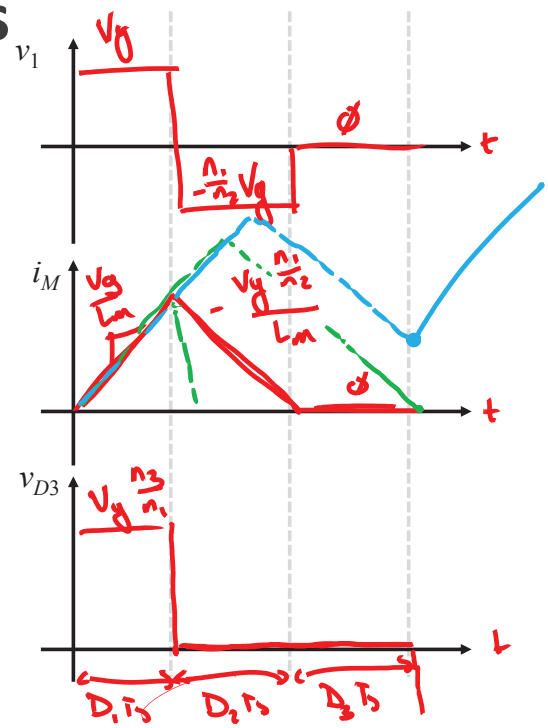

$$\langle v_L \rangle = \phi = D_1 V_g \frac{n_3}{n_1} - V$$

$$\boxed{M(D) = D_1 \frac{n_3}{n_1}}$$

$$\langle v_1 \rangle = \phi = \cancel{V_g} D_1 - \frac{n_1}{n_3} D_2 \cancel{V_g} =$$

$$D_2 = \frac{n_3}{n_1} D_1$$

Constraints:

$$D_1 + D_2 + D_3 = 1$$

$$1 - D_1 - D_2 \geq \phi \rightarrow 1 - D_1 - \frac{n_3}{n_1} D_1 \geq \phi \rightarrow \boxed{D_1 \leq \frac{1}{1 + \frac{n_3}{n_1}}}$$

Transformer Saturation When D>0.5

magnetizing current waveforms, for $n_1 = n_2$

$D_1 < \frac{1}{2}$

$D_1 \leq \frac{1}{1 + \frac{n_2}{n_1}}$

- want $\frac{n_2}{n_1}$ small

$V_{ds,max} = V_g\left(1 + \frac{n_1}{n_2}\right)$

- want $\frac{n_1}{n_2}$ small