Experiment #2 Objectives

- To test and understand steady-state behavior of a GaN-based converter
- To validate analytical loss models of a PWM converter
- To examine techniques for Maximum Power Point Tracking (MPPT)

Demo Board Circuit

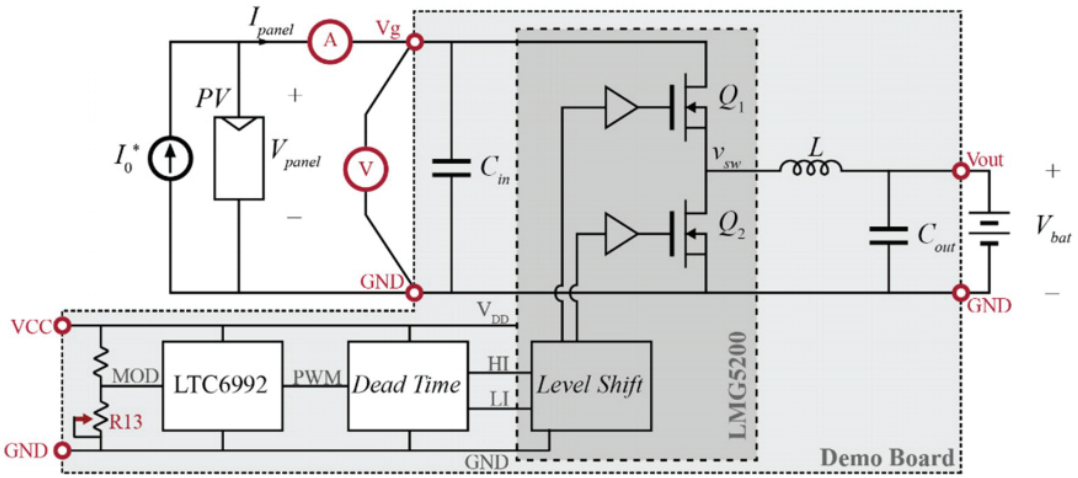

Demo Board

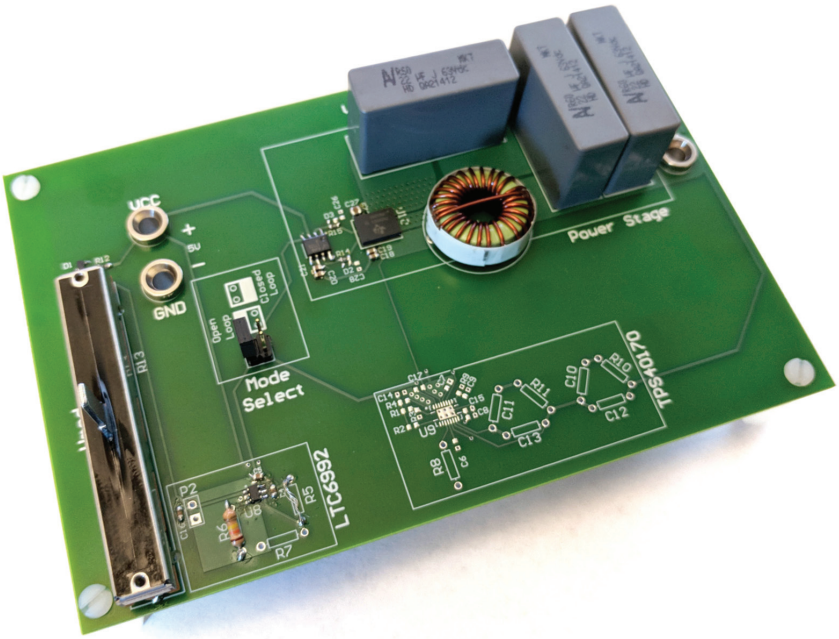

LMG5200 GaN Power Stage

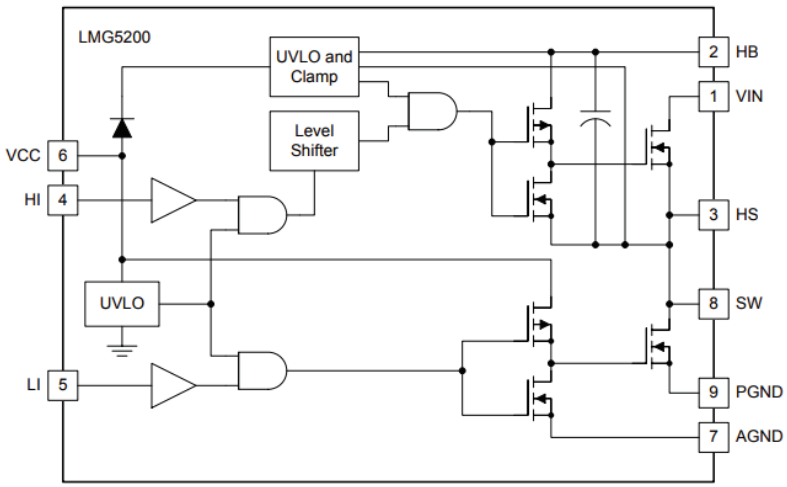

Figure 10. Functional Block Diagram

GaNFETs

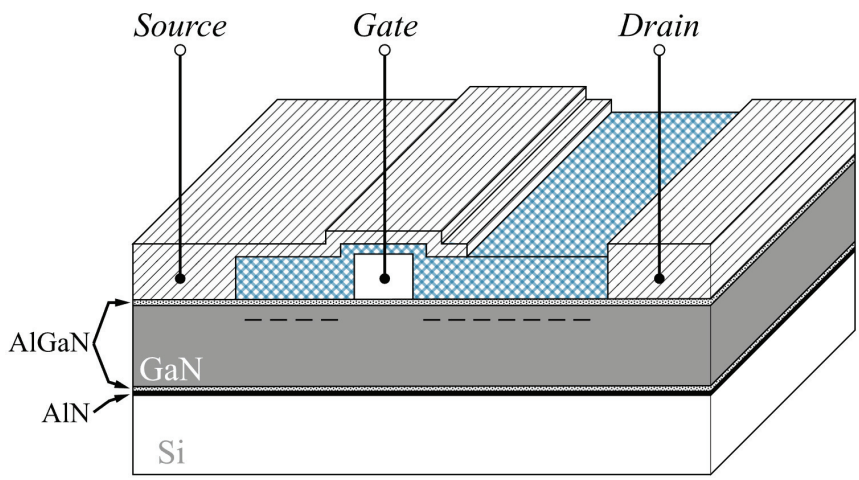

Optimal Device Selection

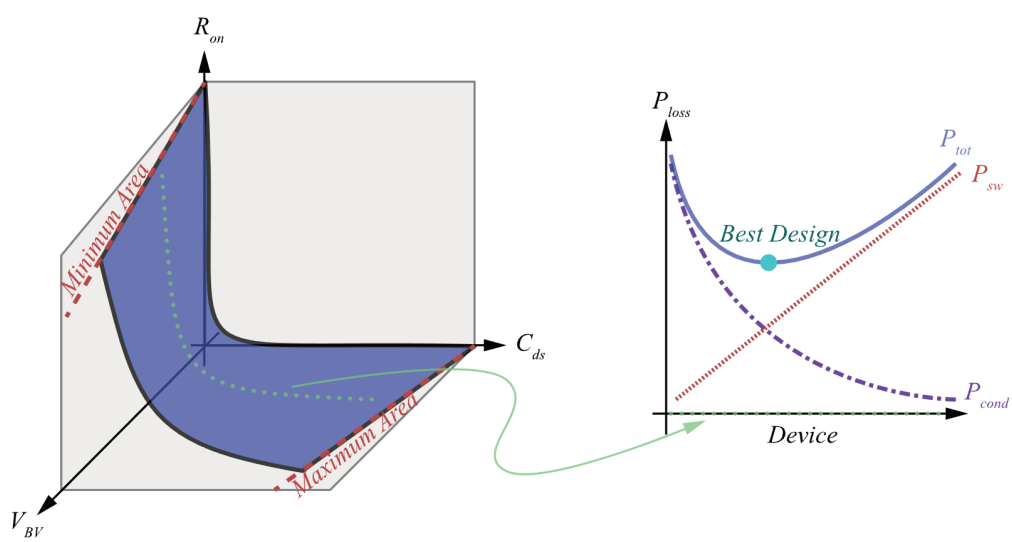

Impact of WBG

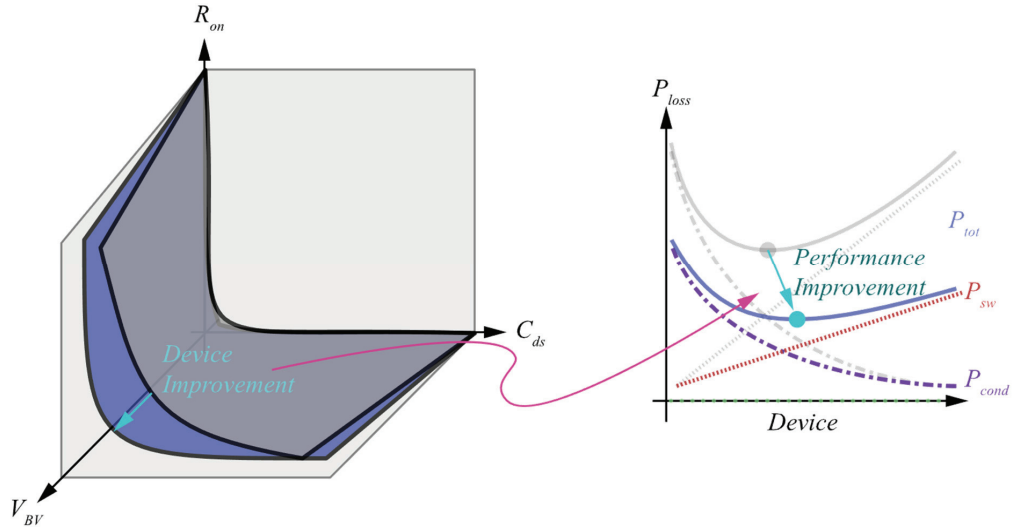

Chapter 9: Controller Design

9.1. Introduction

9.2. Effect of negative feedback on the network transfer functions

9.2.1. Feedback reduces the transfer function from disturbances to the output

9.2.2. Feedback causes the transfer function from the reference input to the output to be insensitive to variations in the gains in the forward path of the loop

9.3. Construction of the important quantities $1/(1+T)$ and $T/(1+T)$ and the closed-loop transfer functions

Chapter 9: Controller Design

Closed-Loop Regulation

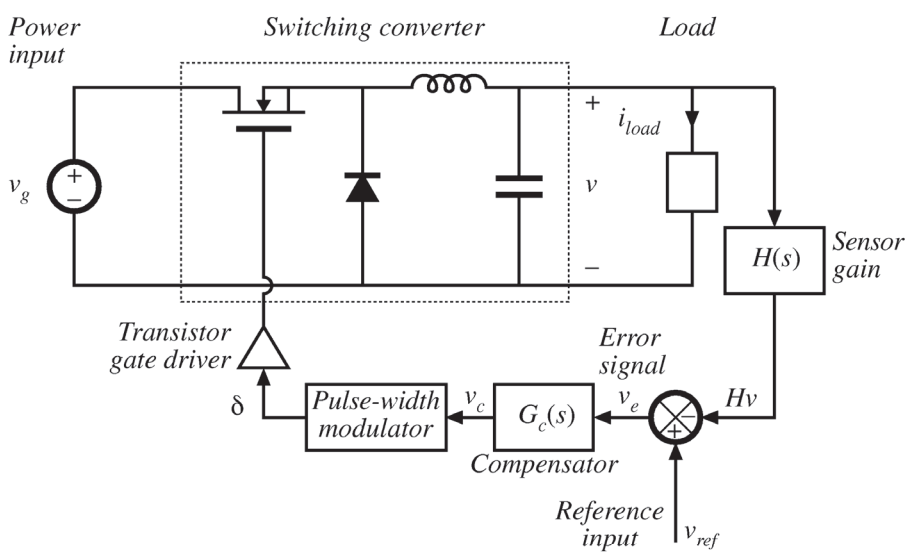

Open-Loop Behavior

Small signal model: open-loop converter

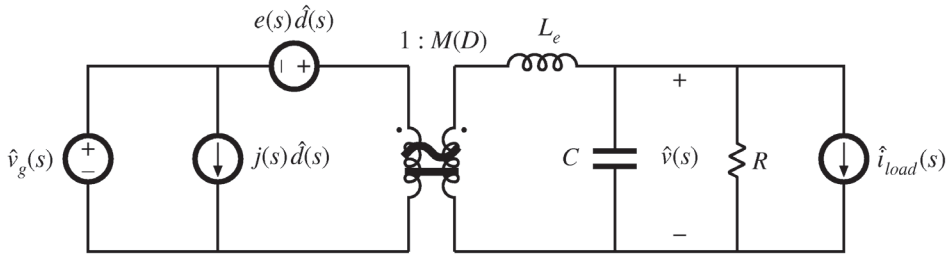

Output voltage can be expressed as

$$\hat{v}(s) = G_{vd}(s)\,\hat{d}(s) + G_{vg}(s)\,\hat{v}_g(s) - Z_{out}(s)\,\hat{i}_{load}(s)$$

where

$$G_{vd}(s) = \left.\frac{\hat{v}(s)}{\hat{d}(s)}\right|_{\substack{\hat{v}_g = 0 \\ \hat{i}_{load} = 0}} \qquad G_{vg}(s) = \left.\frac{\hat{v}(s)}{\hat{v}_g(s)}\right|_{\substack{\hat{d} = 0 \\ \hat{i}_{load} = 0}} \qquad Z_{out}(s) = -\left.\frac{\hat{v}(s)}{\hat{i}_{load}(s)}\right|_{\substack{\hat{d} = 0 \\ \hat{v}_g = 0}}$$

Small-Signal Closed-Loop Model

- *Use small-signal converter model*
- *Perturb and linearize remainder of feedback loop:*

$$v_{ref}(t) = V_{ref} + \hat{v}_{ref}(t)$$

$$v_e(t) = V_e + \hat{v}_e(t)$$

etc.

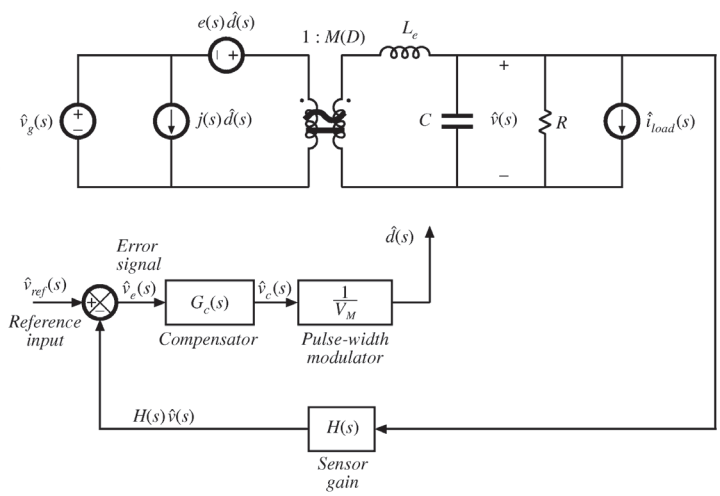

Block Diagram

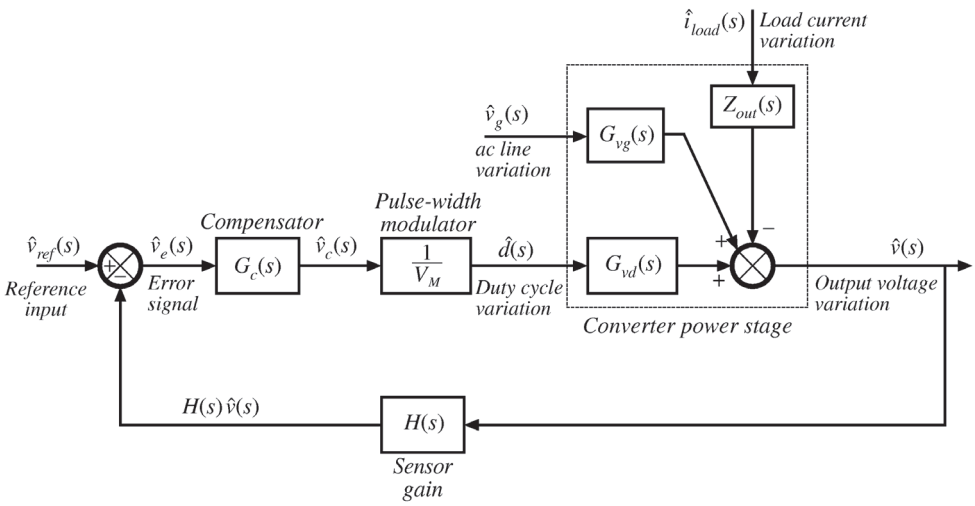

Closed-Loop Transfer Functions

Solution of Block Diagram

Manipulate block diagram to solve for $\hat{v}(s)$. Result is

$$\hat{v} = \hat{v}_{ref} \frac{G_c G_{vd} / V_M}{1 + H G_c G_{vd} / V_M} + \hat{v}_g \frac{G_{vg}}{1 + H G_c G_{vd} / V_M} - \hat{i}_{load} \frac{Z_{out}}{1 + H G_c G_{vd} / V_M}$$

which is of the form

$$\hat{v} = \hat{v}_{ref} \frac{1}{H} \frac{T}{1+T} + \hat{v}_g \frac{G_{vg}}{1+T} - \hat{i}_{load} \frac{Z_{out}}{1+T}$$

$$with \quad T(s) = H(s)\, G_c(s)\, G_{vd}(s) / V_M \quad = \text{"}loop\ gain\text{"}$$

Loop gain $T(s)$ = products of the gains around the negative feedback loop.

Open-Loop and Closed-Loop

Original transfer functions, before introduction of feedback ("open-loop transfer functions"):

$$G_{vd}(s) \qquad G_{vg}(s) \qquad Z_{out}(s)$$

Upon introduction of feedback, these transfer functions become ("closed-loop transfer functions"):

$$\frac{1}{H(s)} \frac{T(s)}{1+T(s)} \qquad \frac{G_{vg}(s)}{1+T(s)} \qquad \frac{Z_{out}(s)}{1+T(s)}$$

The loop gain:

$$T(s)$$