Lead (PD) Compensator

$$G_c(s) = G_{c0}\frac{\left(1+\frac{s}{\omega_z}\right)}{\left(1+\frac{s}{\omega_p}\right)}$$

Improves phase margin

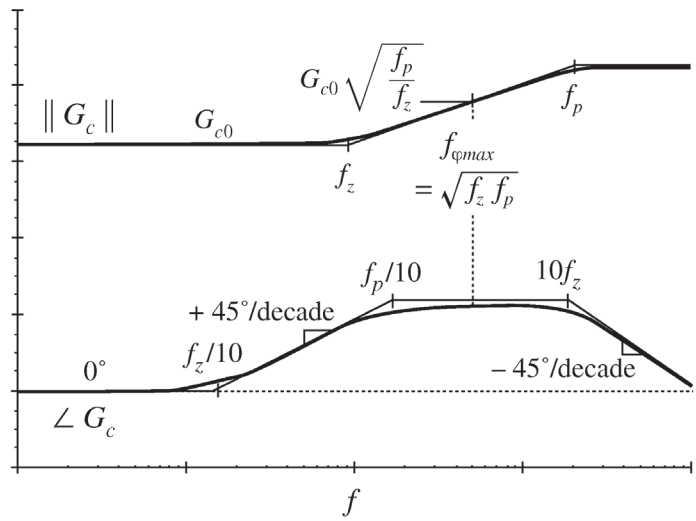

Maximum Phase Lead

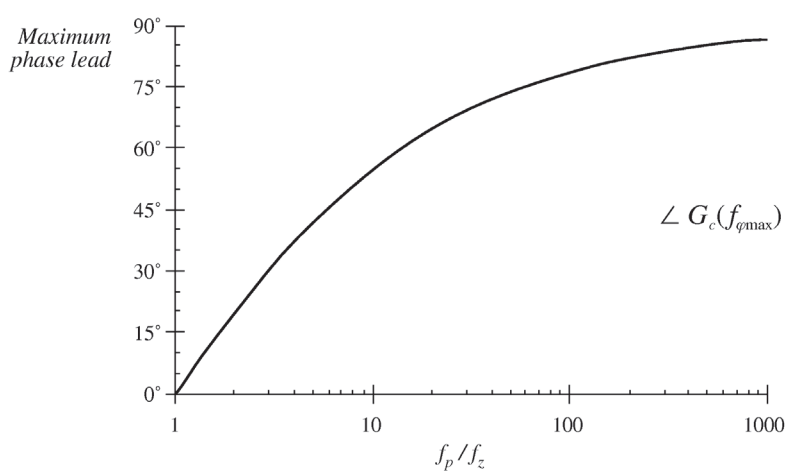

$$f_{\varphi\max} = \sqrt{f_z f_p}$$

$$\angle G_c(f_{\varphi\max}) = \tan^{-1}\left(\frac{\sqrt{\frac{f_p}{f_z}} - \sqrt{\frac{f_z}{f_p}}}{2}\right)$$

$$\frac{f_p}{f_z} = \frac{1+\sin(\theta)}{1-\sin(\theta)}$$

Lead Compensator Design

To optimally obtain a compensator phase lead of θ at frequency f_c, the pole and zero frequencies should be chosen as follows:

$$f_z = f_c \sqrt{\frac{1 - \sin(\theta)}{1 + \sin(\theta)}}$$

$$f_p = f_c \sqrt{\frac{1 + \sin(\theta)}{1 - \sin(\theta)}}$$

If it is desired that the magnitude of the compensator gain at f_c be unity, then G_{c0} should be chosen as

$$G_{c0} = \sqrt{\frac{f_z}{f_p}}$$

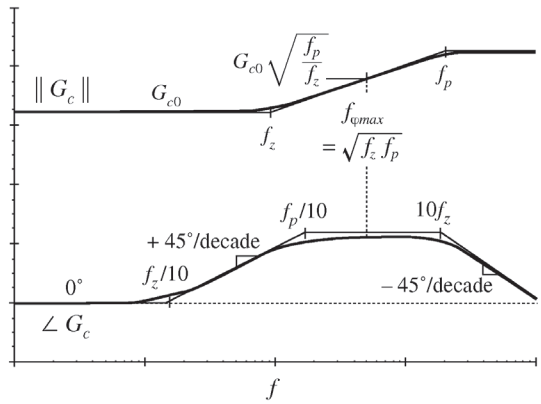

Example Lead Compensator Design

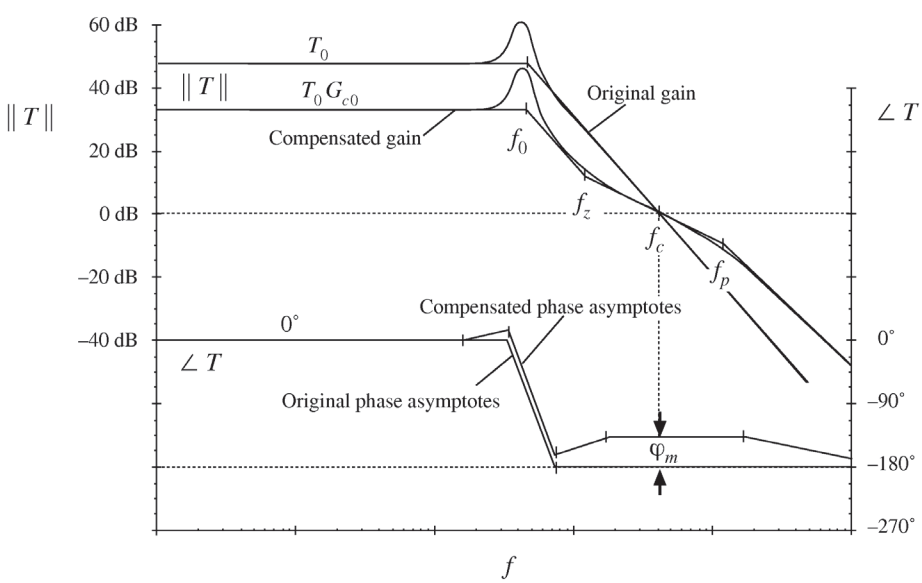

Combined (PID) Compensator

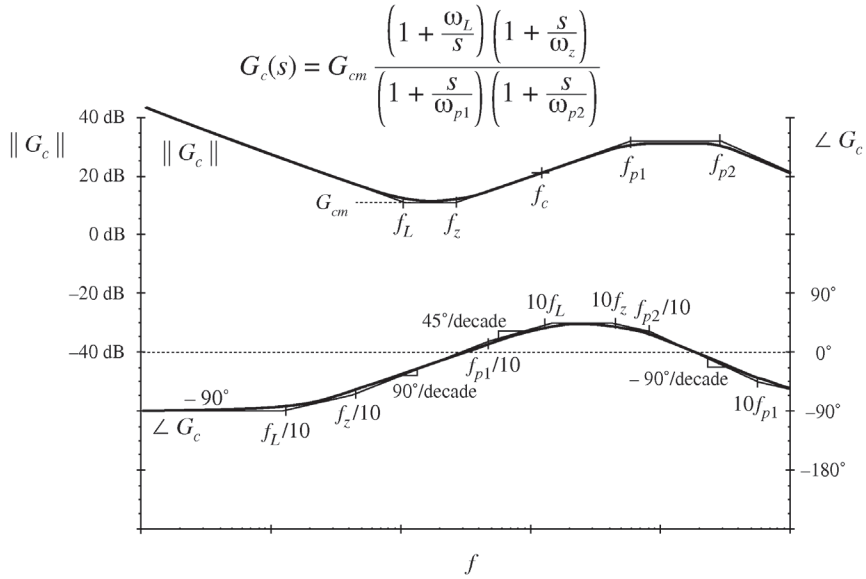

Example Design of Buck Compensator

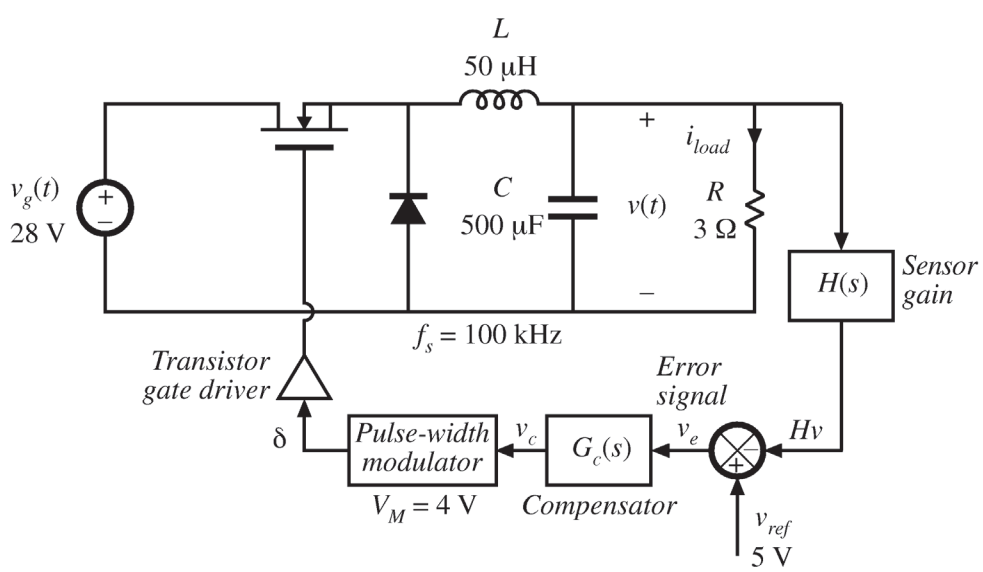

DC (Quiescent) Operating Point

Input voltage	$V_g = 28\text{V}$
Output	$V = 15\text{V},\ I_{load} = 5\text{A},\ R = 3\Omega$
Quiescent duty cycle	$D = 15/28 = 0.536$
Reference voltage	$V_{ref} = 5\text{V}$
Quiescent value of control voltage	$V_c = DV_M = 2.14\text{V}$
Gain $H(s)$	$H = V_{ref}/V = 5/15 = 1/3$

AC Power Stage Model

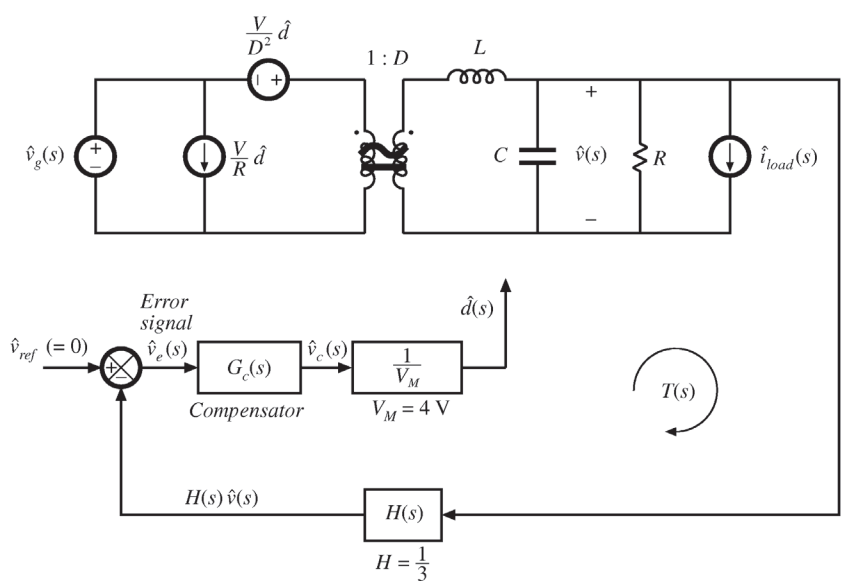

System Block Diagram

$$T(s) = G_c(s)\left(\frac{1}{V_M}\right) G_{vd}(s)\, H(s)$$

$$T(s) = \frac{G_c(s)\, H(s)}{V_M}\, \frac{V}{D}\, \frac{1}{1 + \frac{s}{Q_0 \omega_0} + \left(\frac{s}{\omega_0}\right)^2}$$

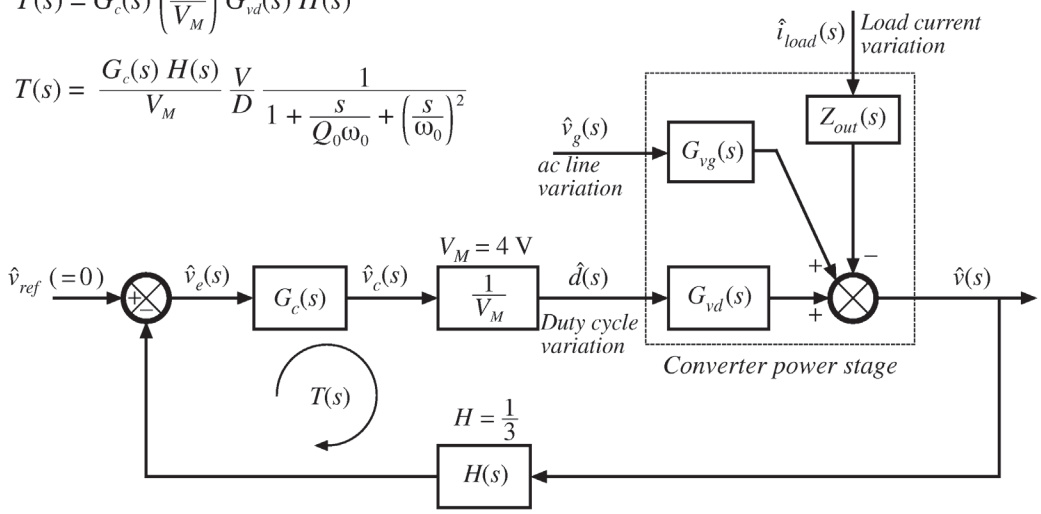

Plotting Uncompensated Loop Gain

With $G_c = 1$, the loop gain is

$$T_u(s) = T_{u0}\, \frac{1}{1 + \frac{s}{Q_0 \omega_0} + \left(\frac{s}{\omega_0}\right)^2}$$

$$T_{u0} = \frac{H\, V}{D\, V_M} = 2.33 \Rightarrow 7.4\text{dB}$$

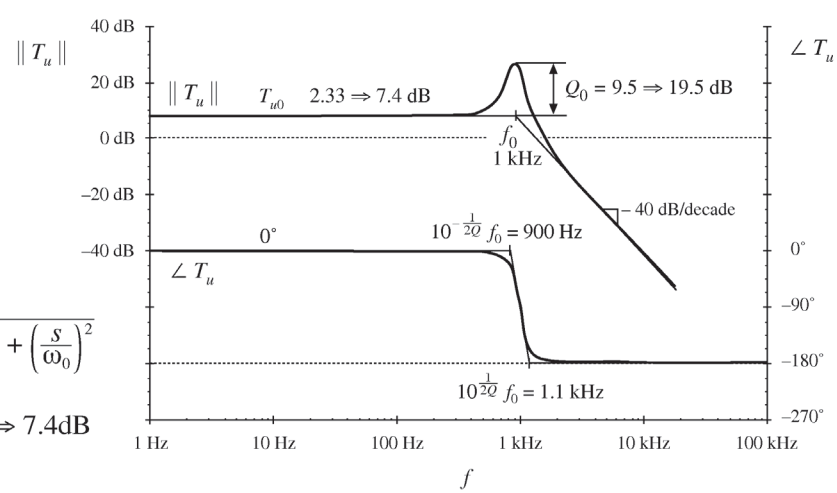

$f_c = 1.8$ kHz, $\varphi_m = 5°$

LTSpice Simulation – AC, Uncompensated

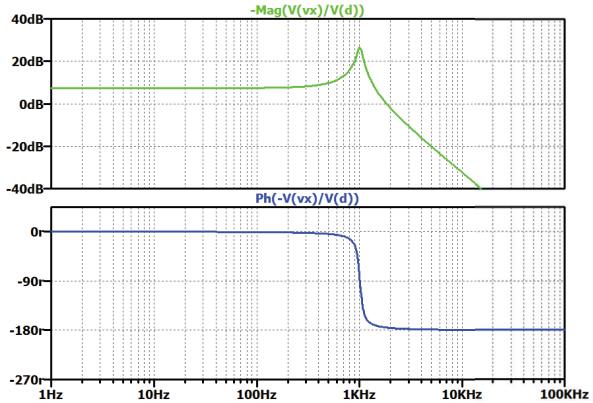

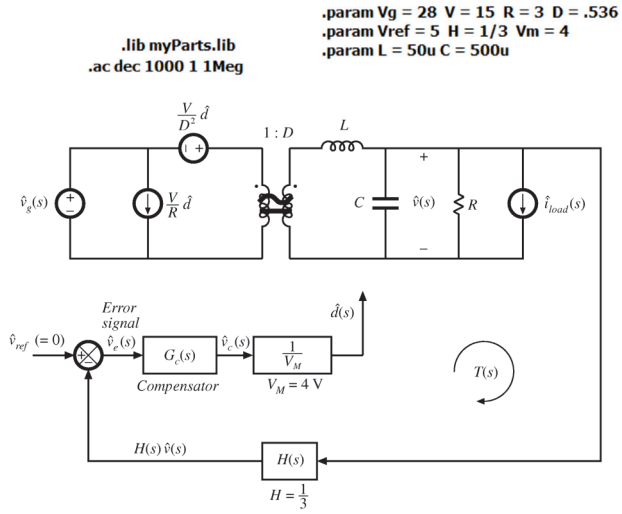

Transient Simulation, Uncompensated

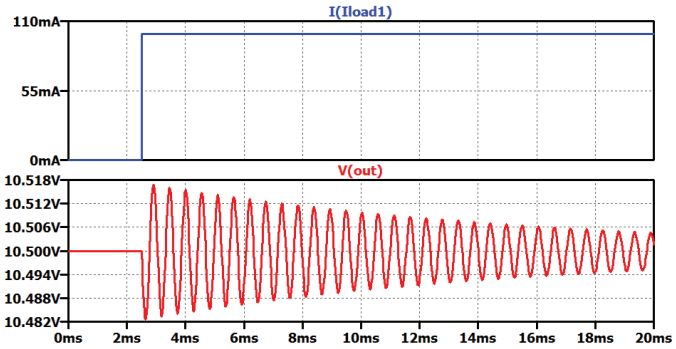

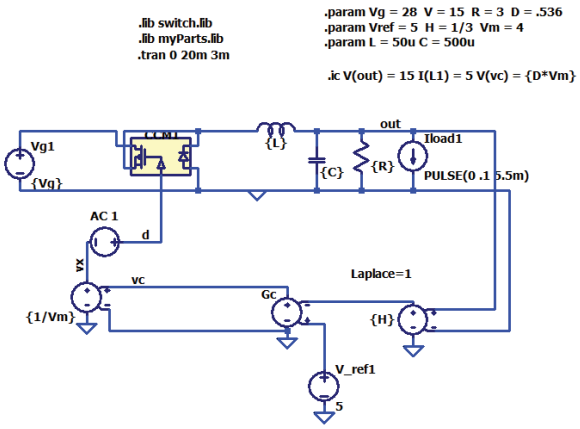

Ringing Frequency

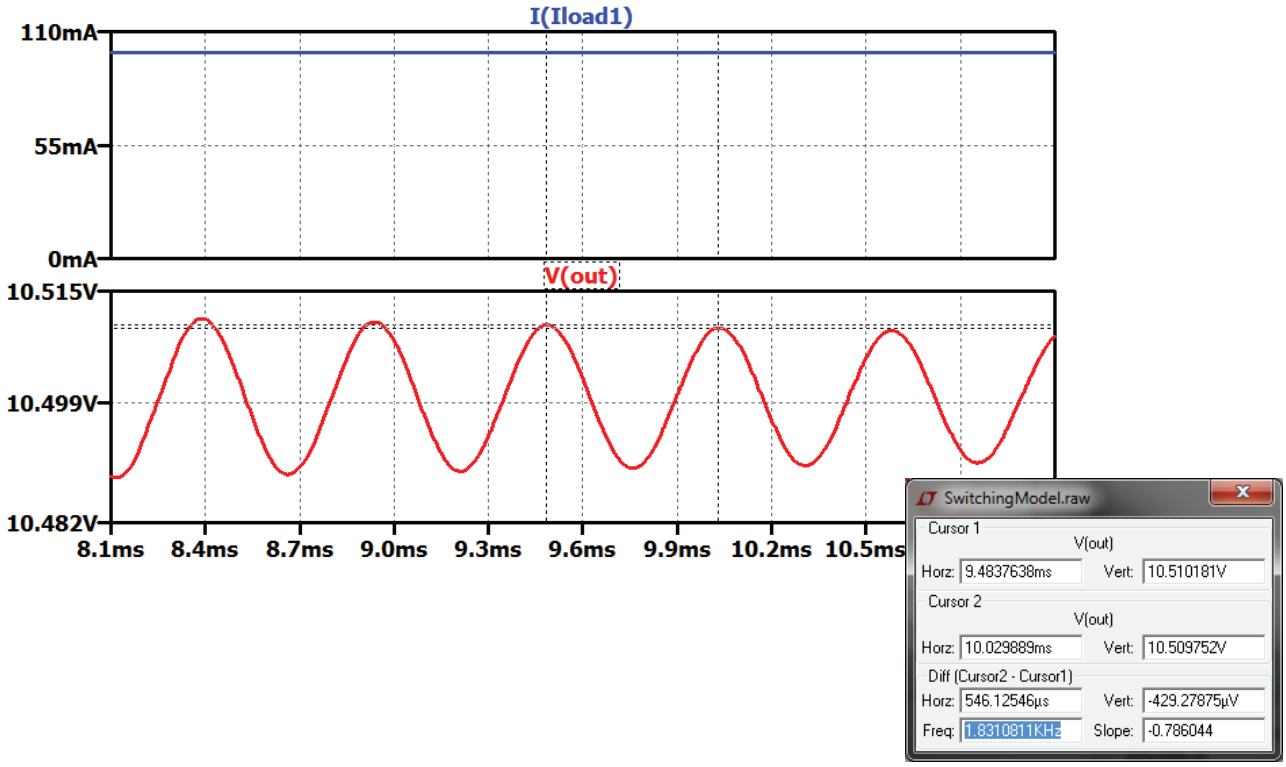

T/(1+*T*)

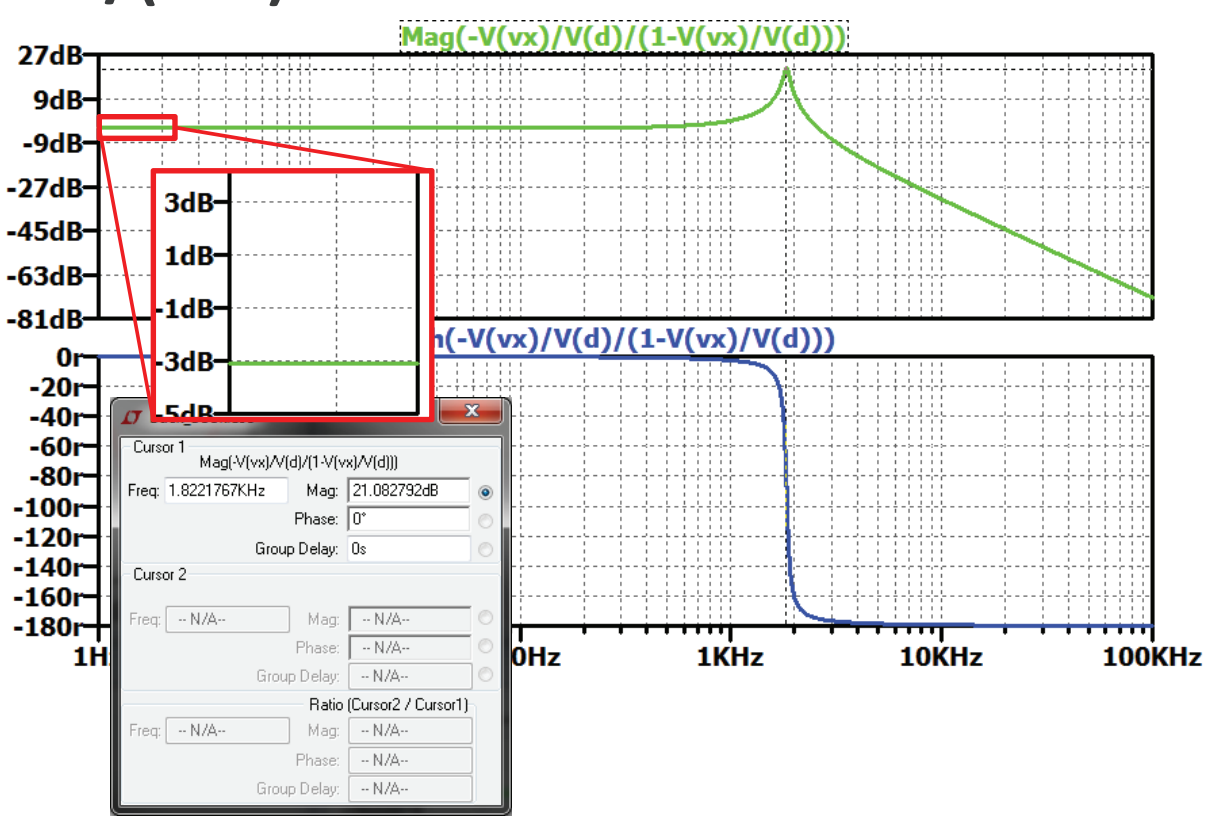

Summary: Uncompensated Behavior

- Significant steady-state error
  - Need to increase low-frequency gain
- Barely stable; significant ringing
  - Need to increase ϕ_m
- Speed: ok
  - f_c = 1.8 kHz
  - $(BW)_{CL}$ = 2.6 kHz
  - OK for $f_s \approx$ 10 kHz or above

Compensator Design

- As an example, try to
  - Increase f_c to 10 kHz
  - Increase ϕ_m to 76° (Q=0.5)
  - Increase $\|T_0\|$ to ∞

- Note: Book Chooses f_c = 5 kHz and ϕ_m =52° (Q=0.5)

PI Design

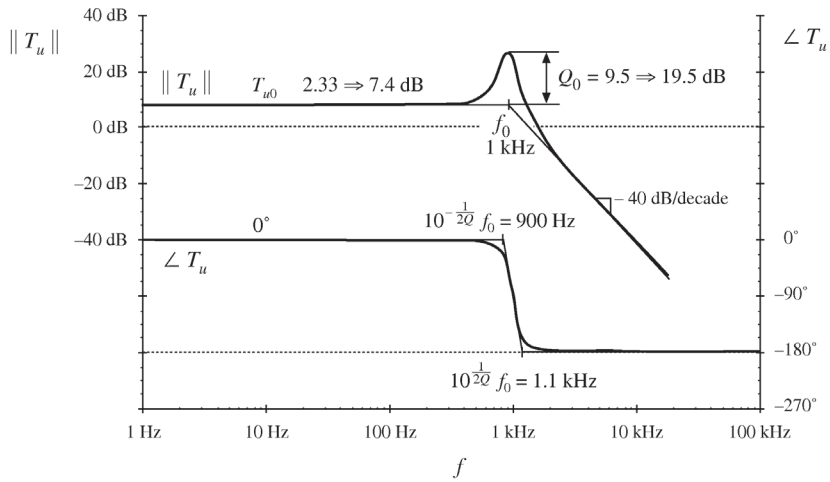

PI Simulation

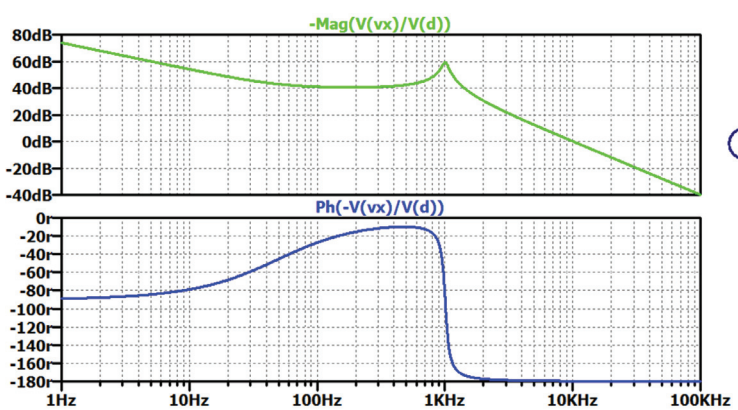

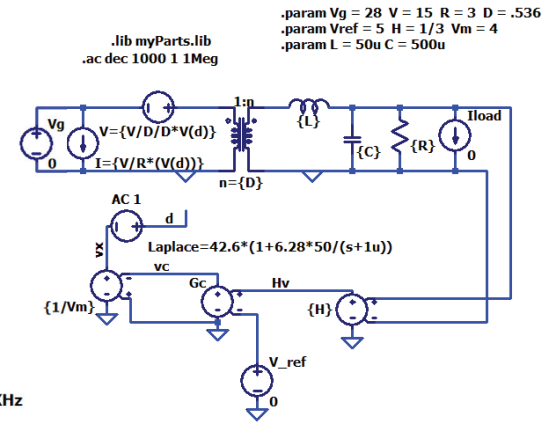

PD Design

$$f_z = f_c \sqrt{\frac{1-\sin(\theta)}{1+\sin(\theta)}}$$

$$f_p = f_c \sqrt{\frac{1+\sin(\theta)}{1-\sin(\theta)}}$$

$$G_{c0} = \sqrt{\frac{f_z}{f_p}}$$

PID Simulation

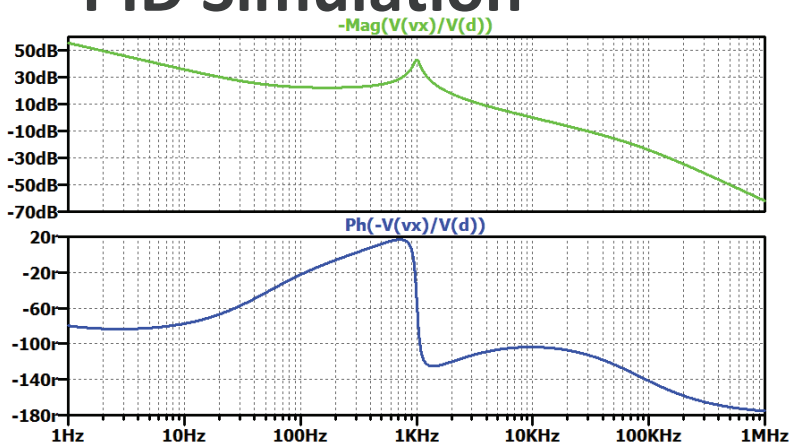

.lib myParts.lib
.ac dec 1000 1 1Meg

.param Vg = 28 V = 15 R = 3 D = .536
.param Vref = 5 H = 1/3 Vm = 4
.param L = 50u C = 500u

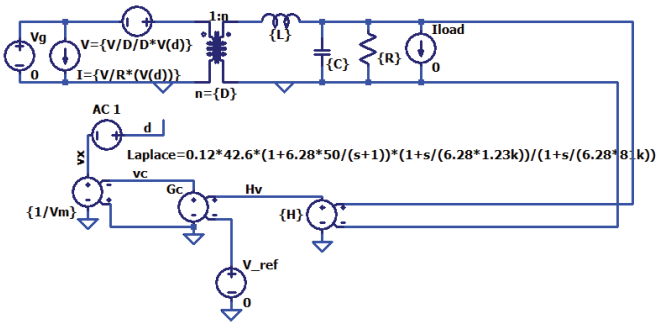

$T/(1+T)$

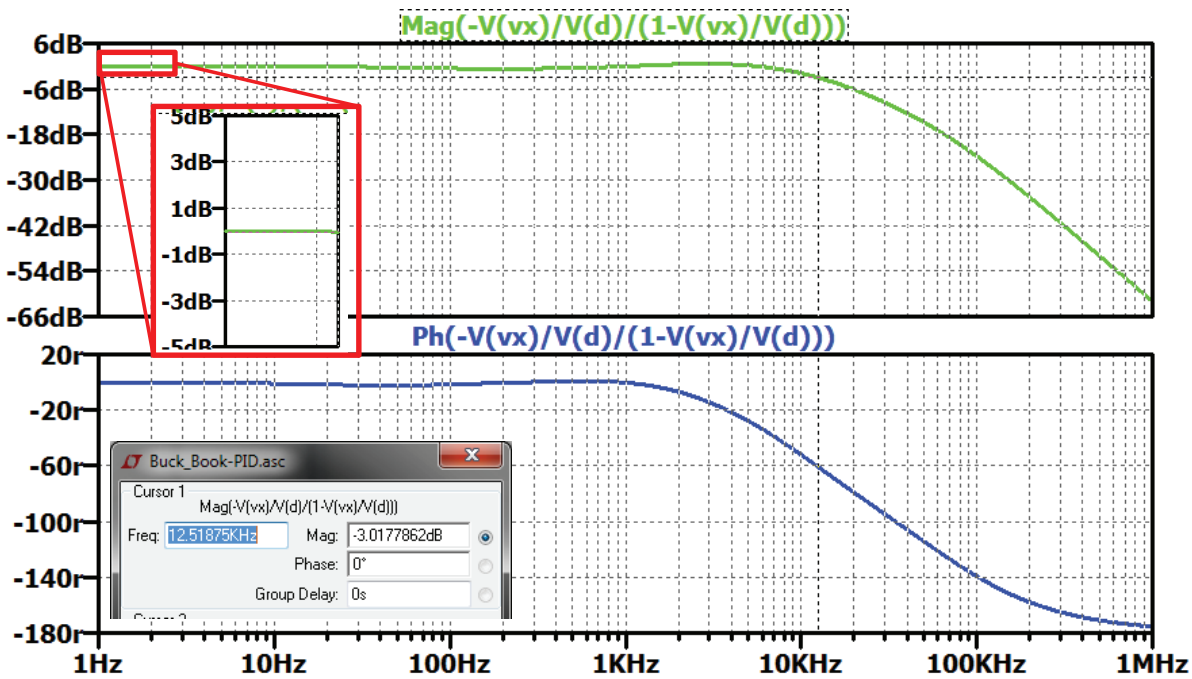

Transient Simulation

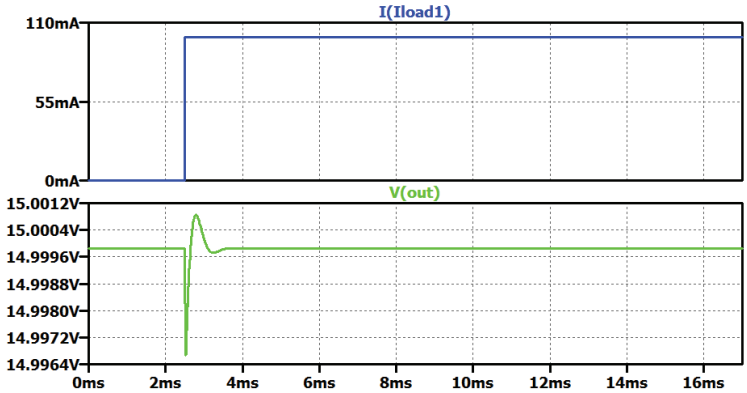


```
.lib switch.lib
.lib myParts.lib
.tran 0 20m 3m
```

```
.param Vg = 28  V = 15  R = 3  D = .536
.param Vref = 5  H = 1/3  Vm = 4
.param L = 50u C = 500u

.ic V(out) = 15 I(L1) = 5 V(vc) = {D*Vm}
```