Loss Comparison

$V_s = V_{ds,pk} = 850V$

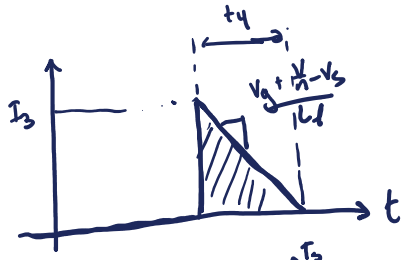

$$P_s = E_s f_s = f_s \int_0^{T_s} V_s \cdot i_s(t)\, dt = f_s V_s \int_0^{T_s} i_s\, dt$$

$$P_s = f_s V_s \tfrac{1}{2} t_4 I_3 = f_s V_s \tfrac{1}{2} I_3 \left[\frac{I_3}{V_g + \frac{V}{n} - V_s}\right] L_l$$

Using previous design example

$E_s = 72\mu J$

$P_s = \underline{72W}$!!

} Loss? Power to V_s source

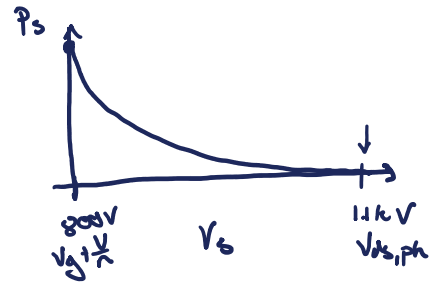

Snubber Implementations

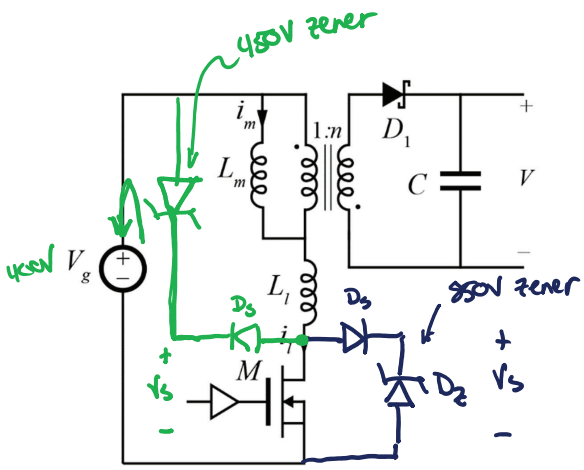

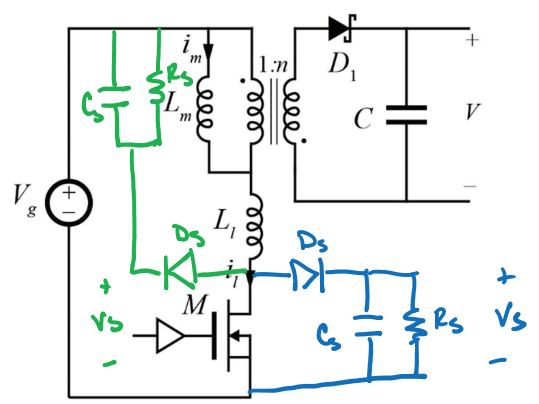

$C_s \rightarrow$ large, small ripple

$$P_s = \frac{V_s^2}{R_s} \leftarrow$$

Active Clamping

Either implementation

$\langle i_s \rangle|_{T_s} = \phi$

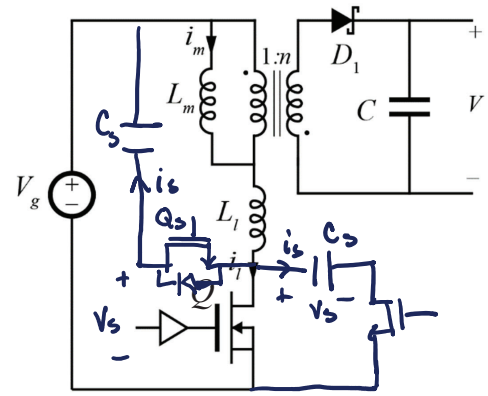

$C_s, L_m, C \rightarrow$ low-ripple filter elements

$C_{ds}, L_l \rightarrow$ resonant element

Active Clamping

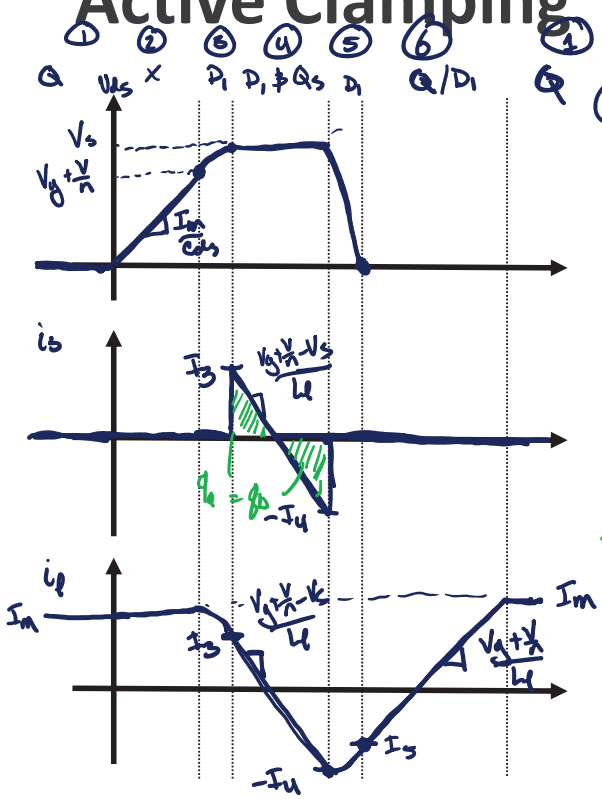

$V_{base} = V_g + \frac{V}{n}$

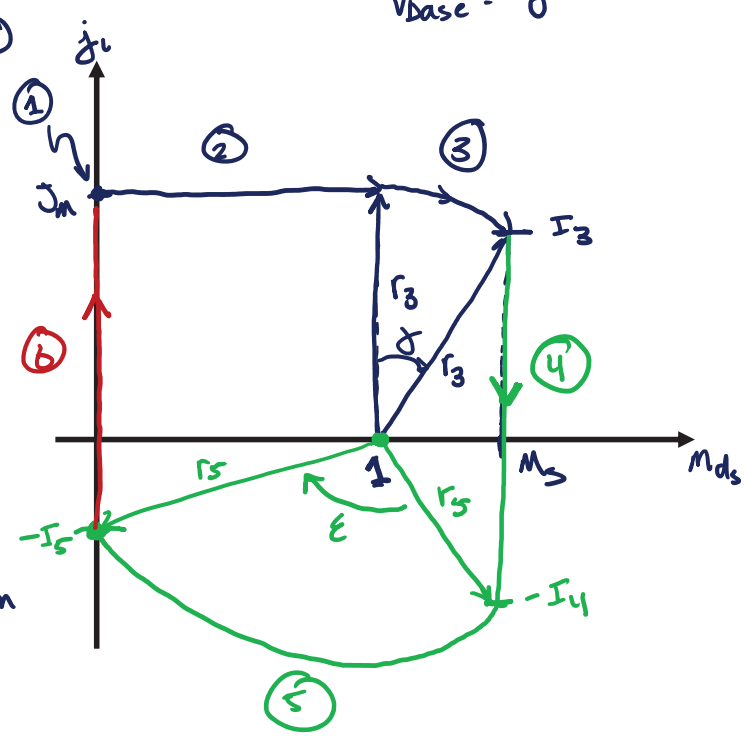

Subinterval Equivalent Circuits

1 → Q turns off → 2 → D_1 turns on → 3 → Q_s turns on (@ $V_{ds} = V_s$)

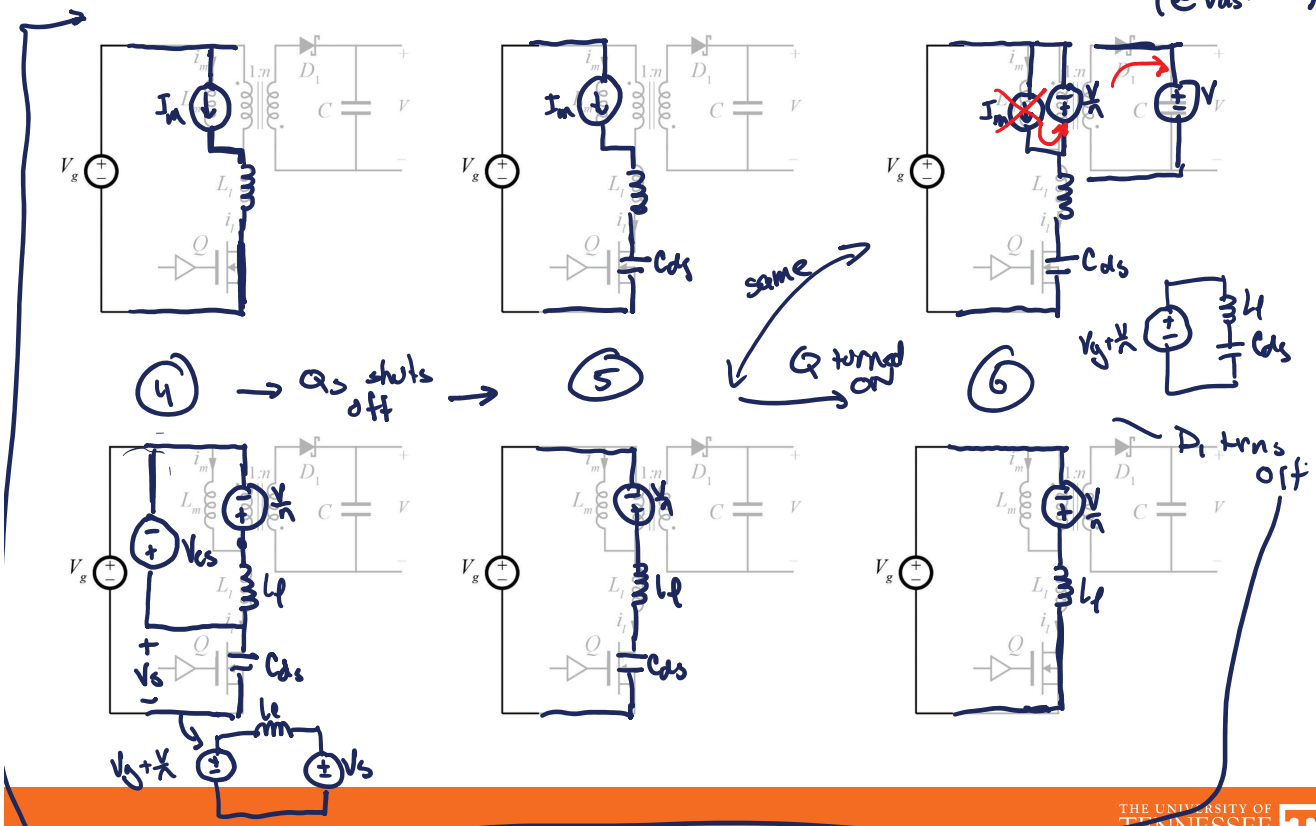

4 → Q_s shuts off → 5 → 6

ZVS Conditions

Two zvs subintervals:

3 $\boxed{J_m \geq M_s - 1}$ → Can turn on Q_s w/ ZVS

(Not all that important)

5 $r_s \geq 1$

$r_s = \sqrt{J_y^2 + (M_s - 1)^2}$

$\boxed{\sqrt{J_y^2 + (M_s - 1)^2} \geq 1}$