Output Current Vs. Inductance

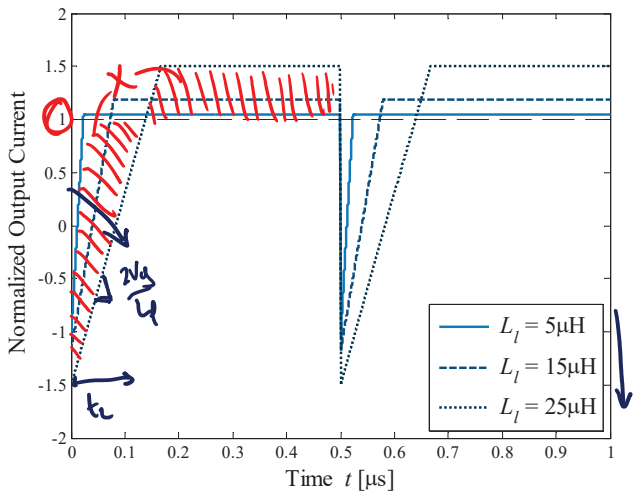

$\uparrow L_l \rightarrow t_2 \uparrow \rightarrow \uparrow I_{ph}$

same $\langle I_{out} \rangle$, $\uparrow I_{ph}$
$\rightarrow \uparrow I_{Lrms}$
Higher P_{cond} as $L_l \uparrow$

Output Current Vs. Inductance

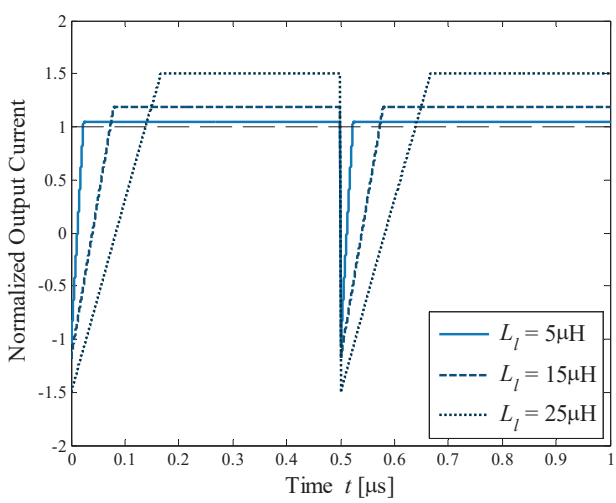

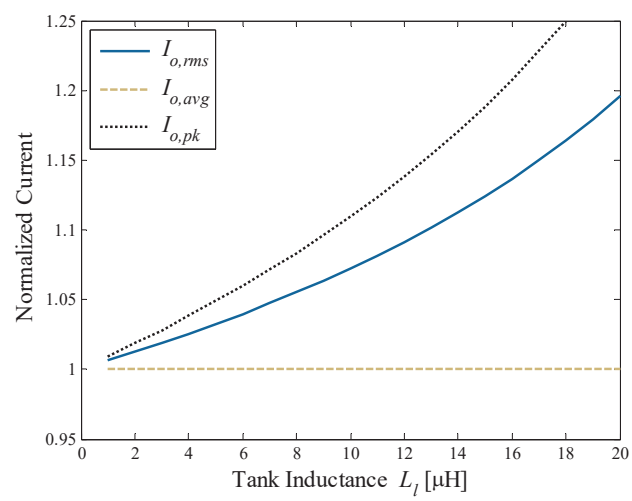

Constraints on Inductance

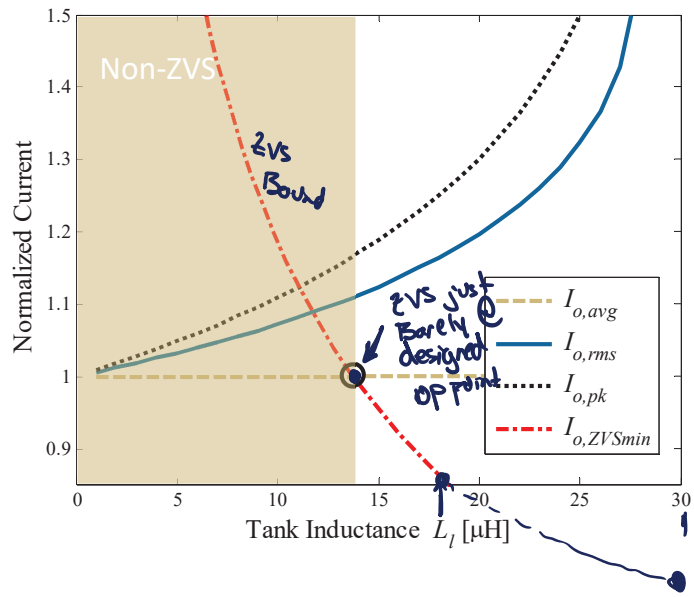

DAB: Experimental Results

150-to-12V, 120W DAB @ 1MHz

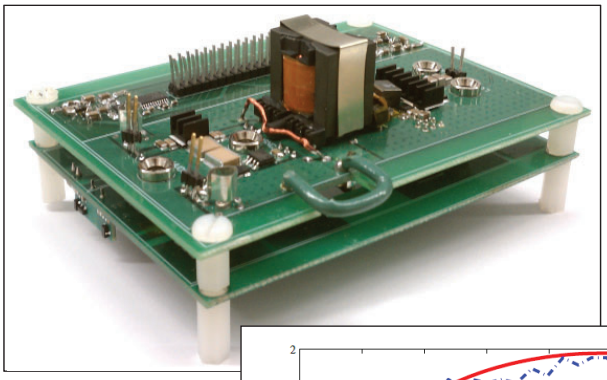

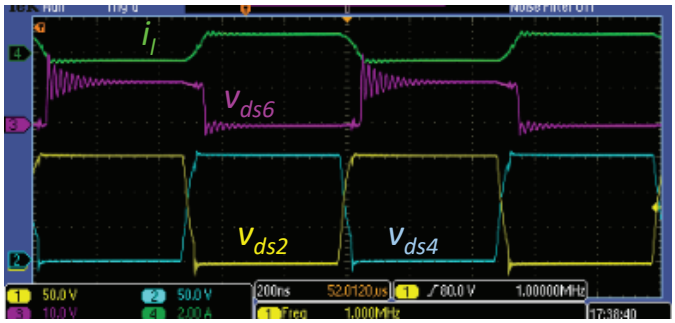

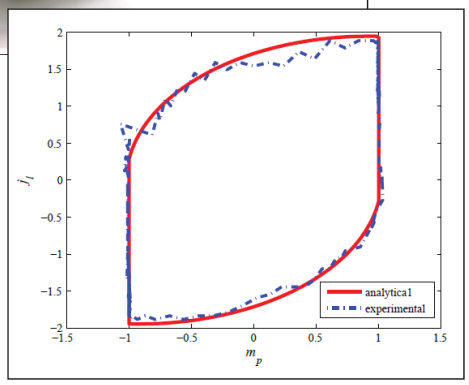

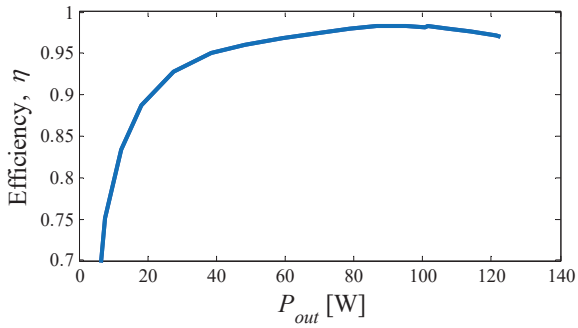

D. Costinett, D. Maksimovic, and R. Zane, "Design and control for high efficiency in high step-down dual active bridge converters operating at high switching frequency," IEEE Trans. Power Electron., vol. PP, no. 99, p. 1, 2012.

Operation with $V \neq nV_g$

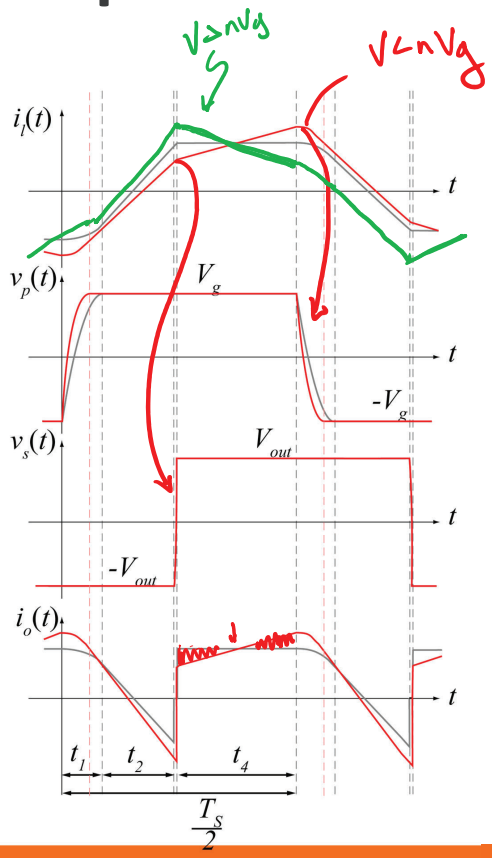

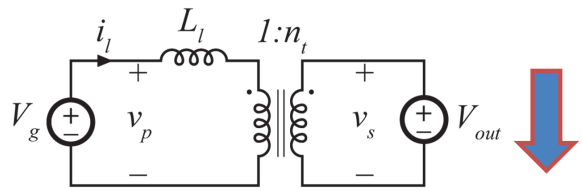

- E.g. Decrease to

  $\frac{V}{nV_g} = M_N < 1$

  by decreasing output voltage
- Current now ramping, causing more energy available for primary ZVS, but higher RMS currents
- Can use behavior to extend ZVS range of one bridge

Soft Switching Range with Varying V_{out}

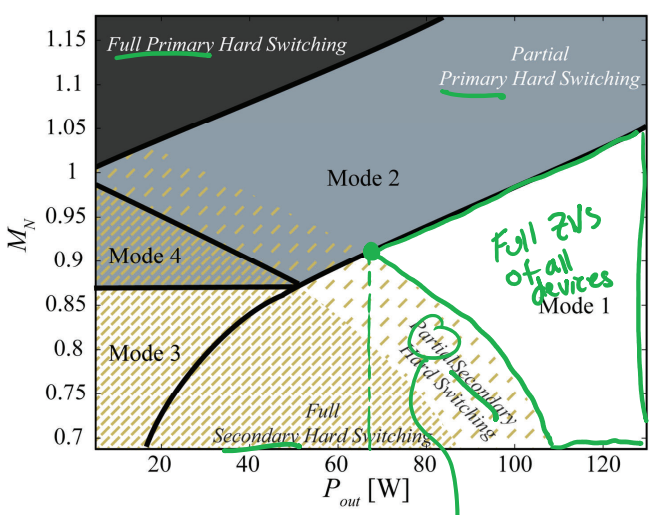

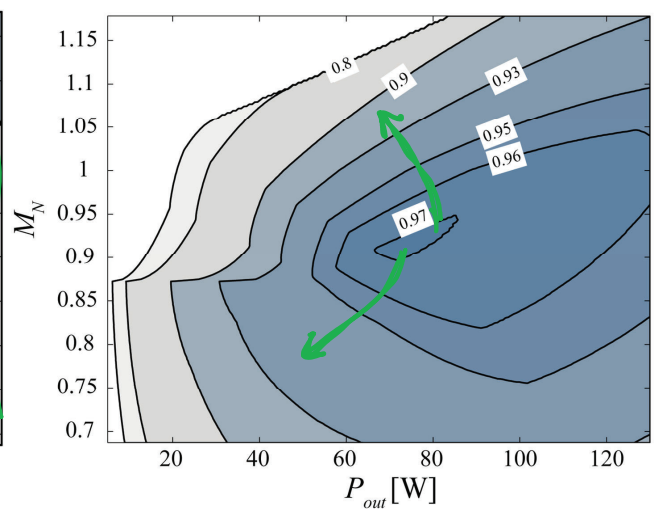

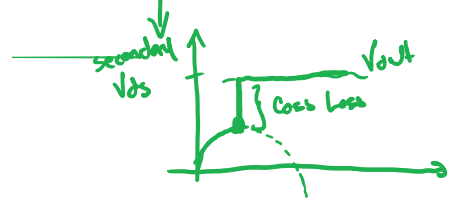

D. Costinett, D. Maksimovic, and R. Zane, "Design and control for high efficiency in high step-down dual active bridge converters operating at high switching frequency," IEEE Trans. Power Electron., vol. PP, no. 99, p. 1, 2012.

Application Example: Automotive

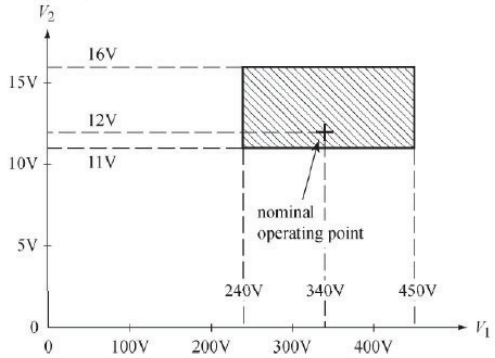

Fig. 1. Converter operating voltage ranges required for automotive application.

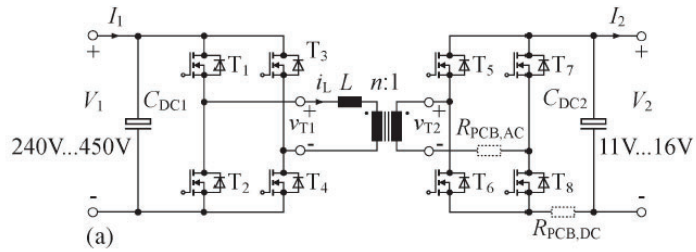

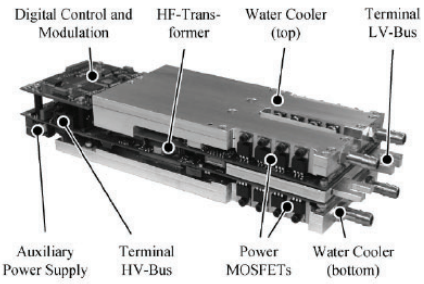

Fig. 3. Automotive DAB converter (273 × 90 × 53 mm).

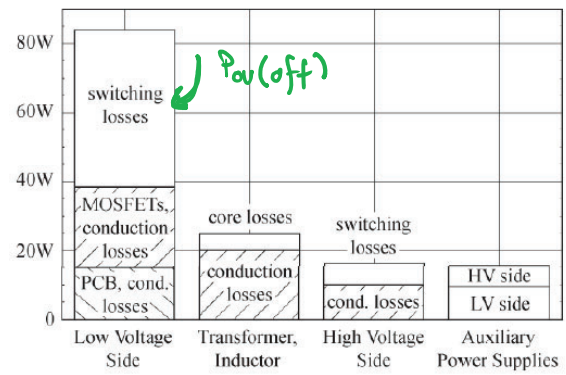

Fig. 13. Calculated distribution of the power losses for operation at $V_1 = 340$ V, $V_2 = 12$ V, and $P_2 = 2$ kW.

*F. Krismer, J.W.Kolar, "Accurate Power Loss Model Derivation of a High-Current Dual Active Bridge Converter for an Automotive Application, IEEE Trans. On Industrial Electronics, March 2010

Alternate Modulation Schemes

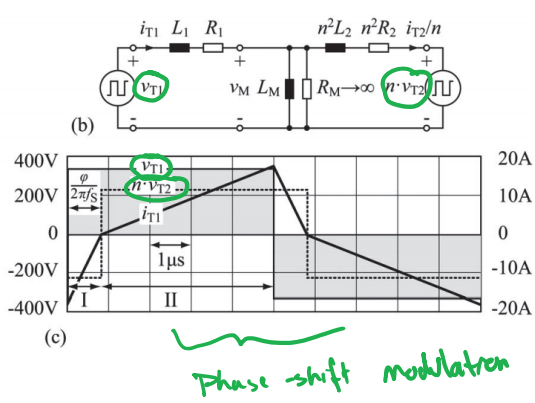

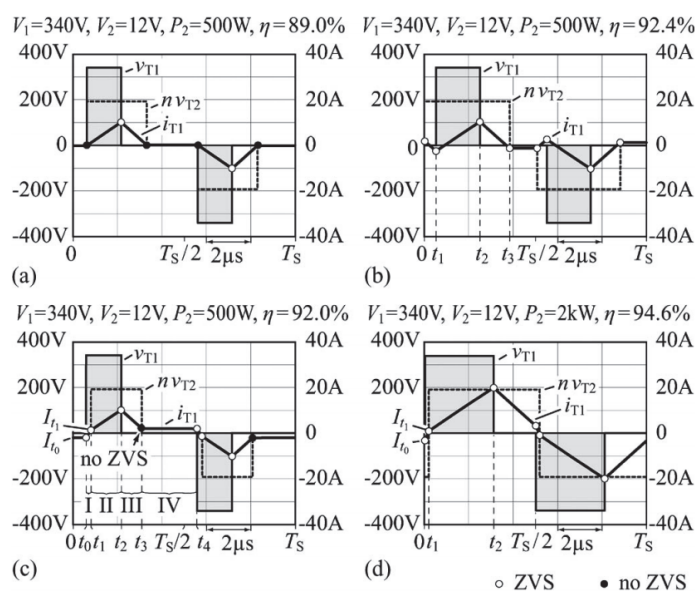

DAB: Transformer Saturation

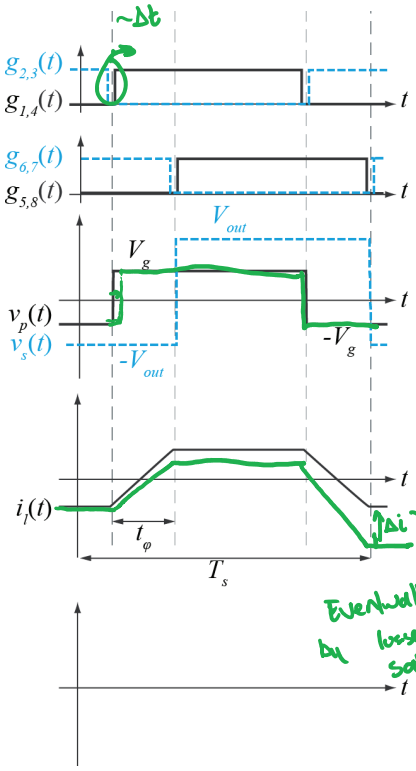

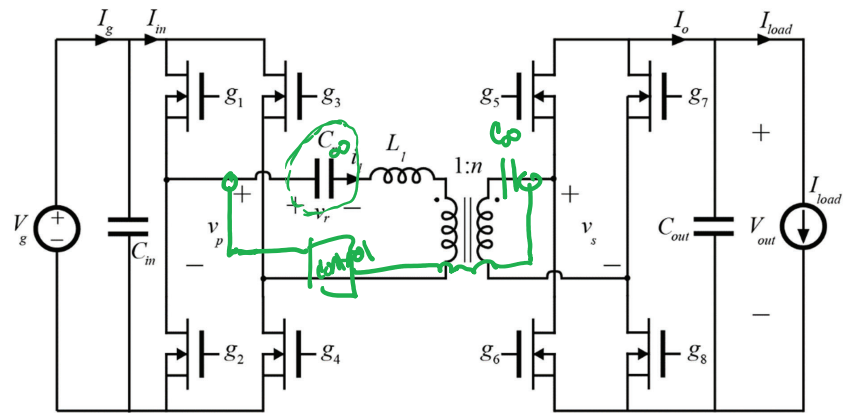

Eventually balanced by losses, ZVS transitions, saturation of XF

Prevent saturation of XF:

(1) Current-mode control

(2) Blocking caps

$C_\infty \rightarrow$ Large

Series Resonant Converter

Phase-shift Modulation

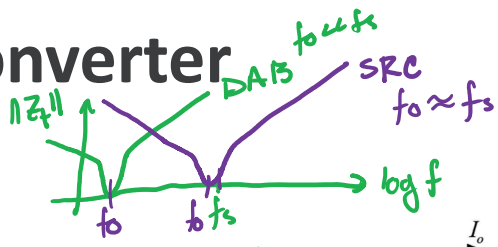

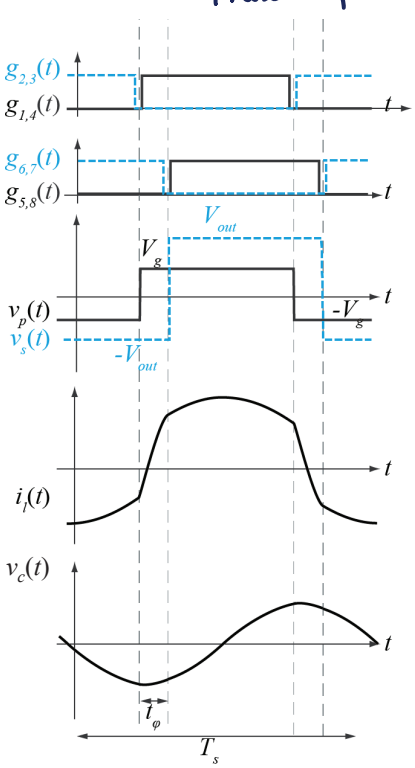

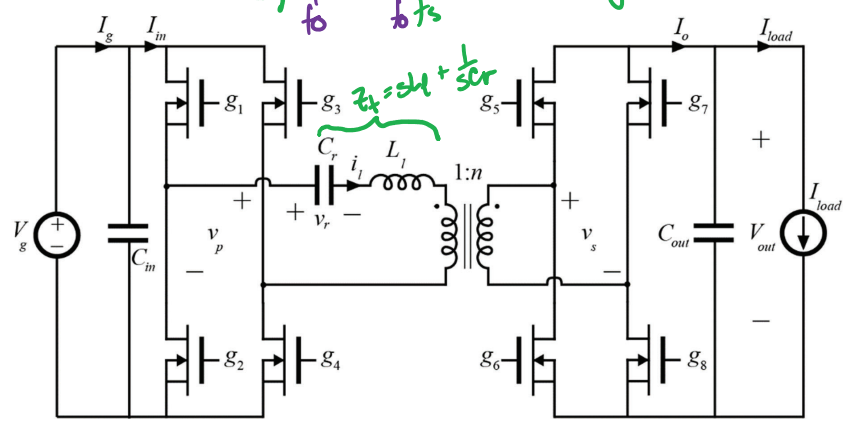

Neglect C_p & C_s (Coss of transistors)

Normalize based on $R_0 = \sqrt{\frac{L_l}{C_r}}$

Subinterval Equivalent Circuits

$V_{base} = V_g$ $\boxed{M = n}$

DC-solution

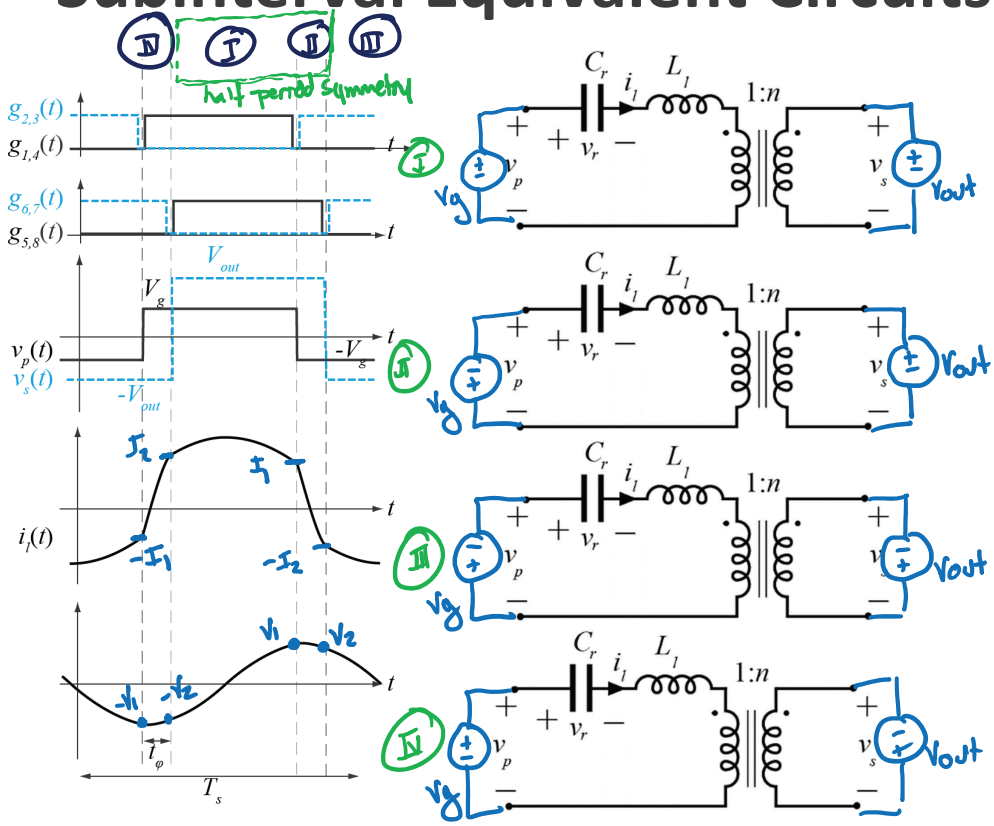

$\begin{cases} J_{DC} = \phi \\ M_{DC} = \frac{V_g - \frac{V_{out}}{n}}{V_g} = 1 - \frac{M}{n} = \phi \end{cases}$

$\begin{cases} J_{DC} = \phi \\ M_{DC} = -1 - \frac{M}{n} = -2 \end{cases}$

$\begin{cases} J_{DC} = \phi \\ M_{DC} = -1 + \frac{M}{n} = \phi \end{cases}$

$\begin{cases} J_{DC} = \phi \\ M_{DC} = 1 + \frac{M}{n} = 2 \end{cases}$

Complete State Plane – Phase Shift Modulation