Test Circuit

$f_s = 1MHz$
48-to-16 V
$\langle v_d \rangle = 16V$

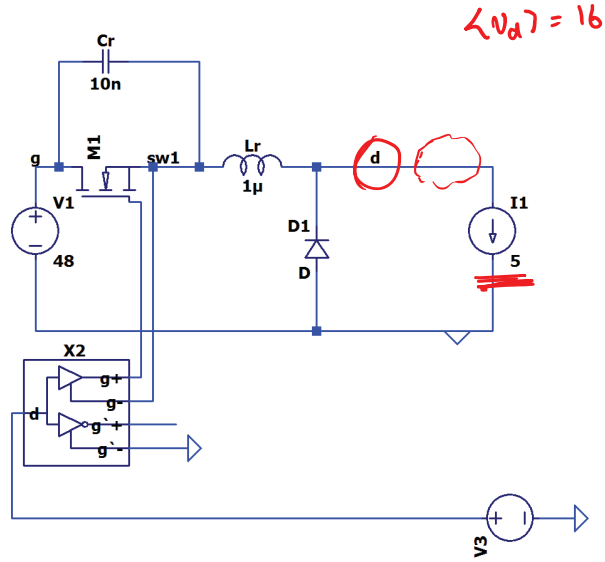

$\xi_L = \frac{5A}{48V} \sqrt{\frac{1mH}{10nF}} \approx 1$

↳ very near to ZVS boundary

Simulation Results

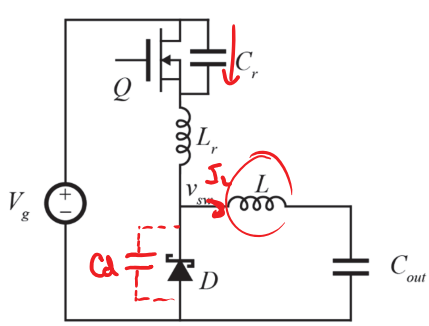

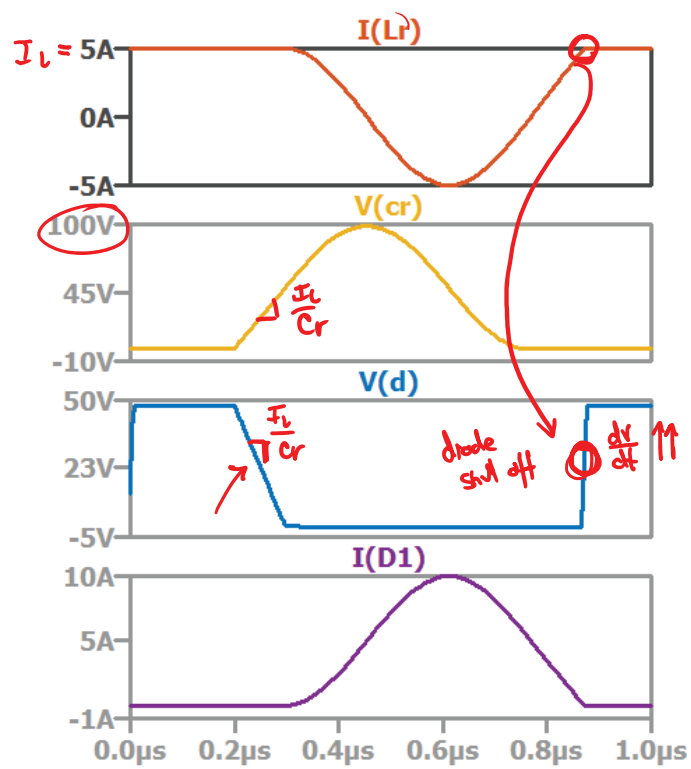

Diode Capacitance

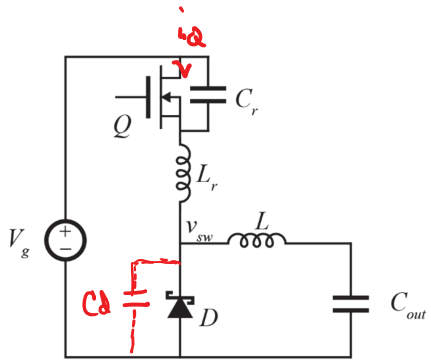

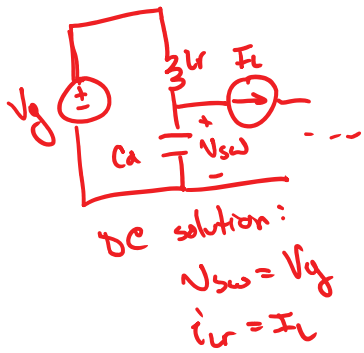

DC solution:

$V_{sw} = V_g$

$i_{Lr} = I_L$

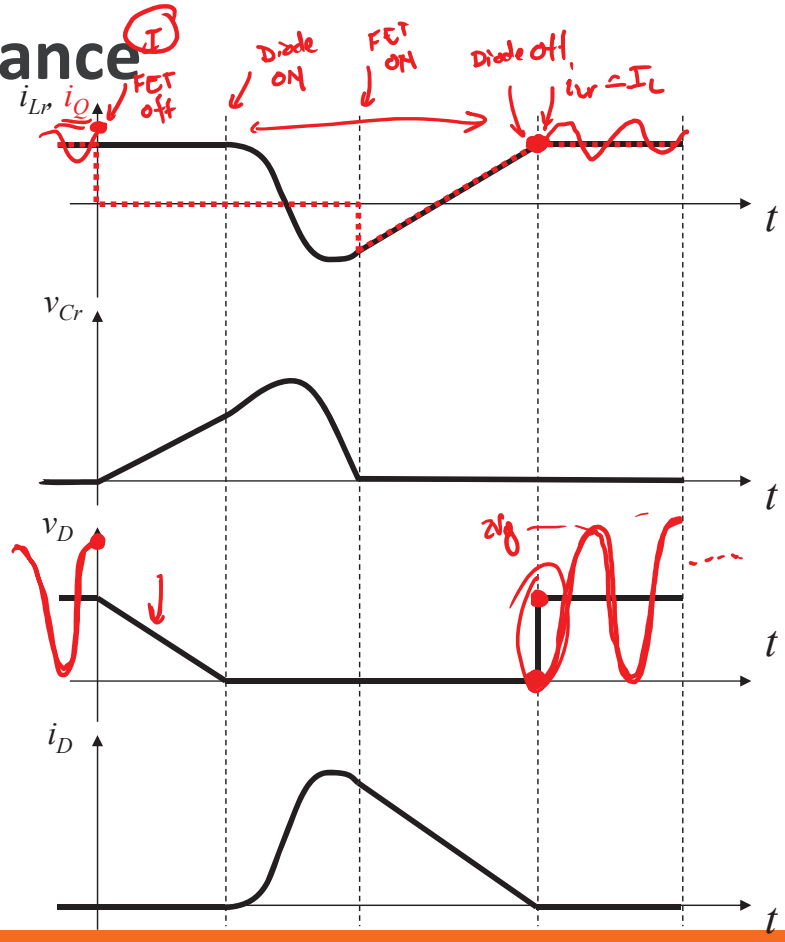

Simulation Results: Diode Capacitance

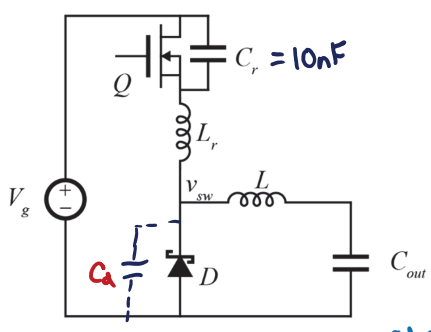

$C_d = 100pF$

$C_d = 1nF$

$C_d = 10nF$

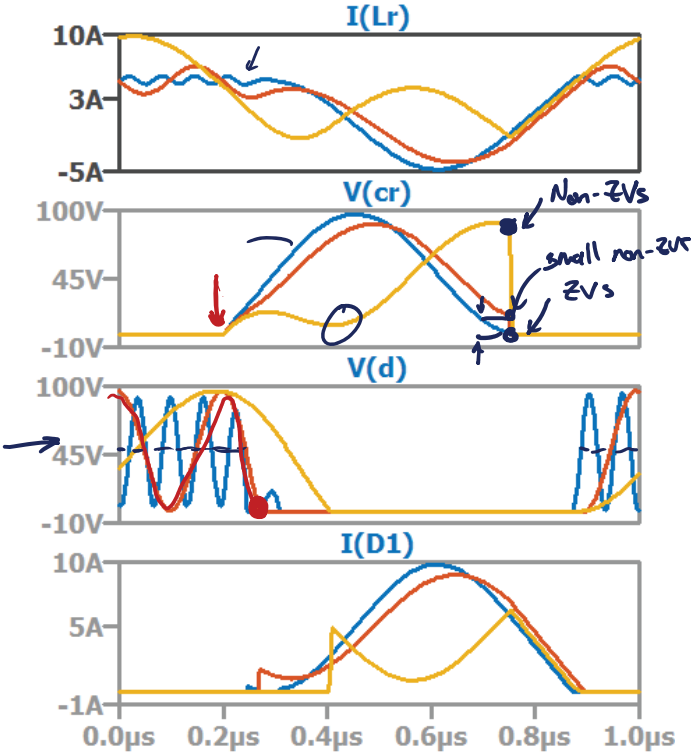

Wishlist: Multi-Resonant

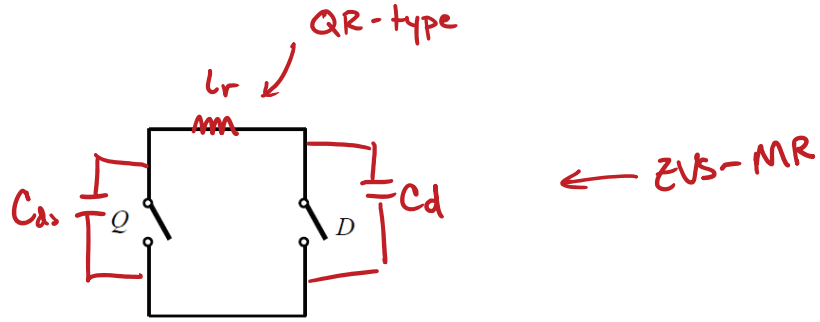

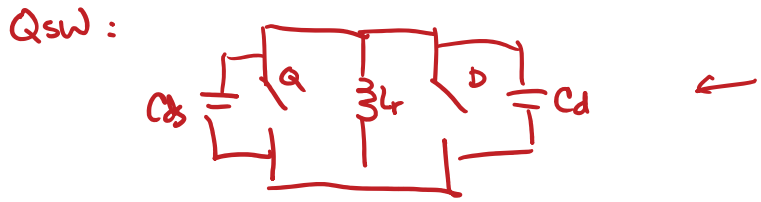

ZVS-MR Buck

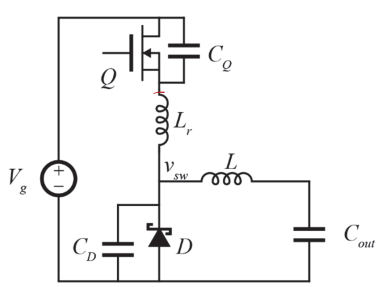

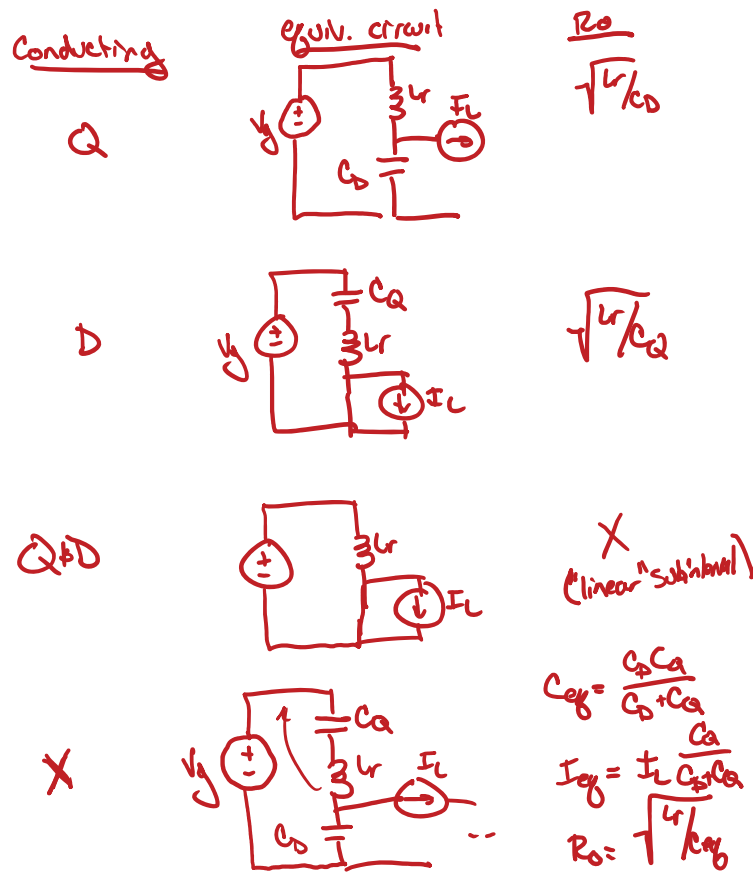

W. A. Tabisz and F. C. Lee, "Zero-voltage-switching multi-resonant technique-a novel approach to improve performance of high frequency quasi-resonant converters," *Power Electronics Specialists Conference, 1988.*

Operating Modes

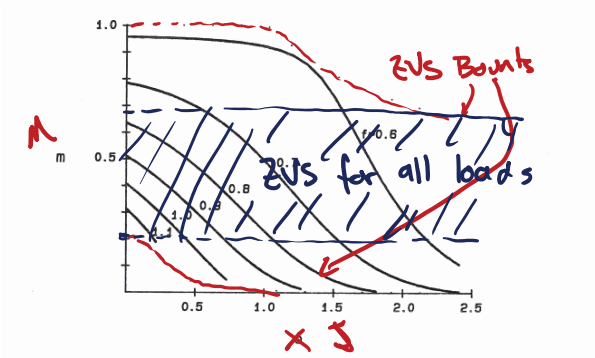

Figure 10.7: Load-to-output DC characteristics of a ZV-MR converter operating in modes $(I, II)_1$.

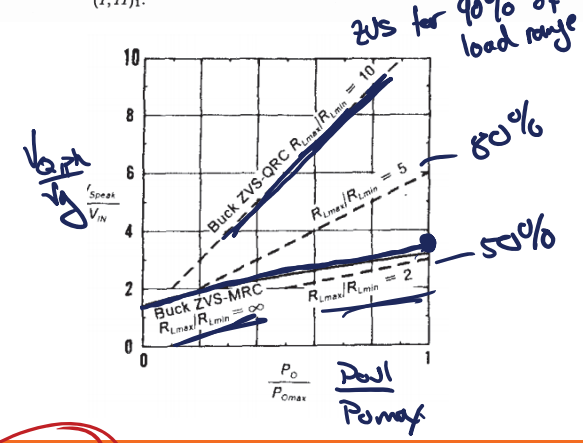

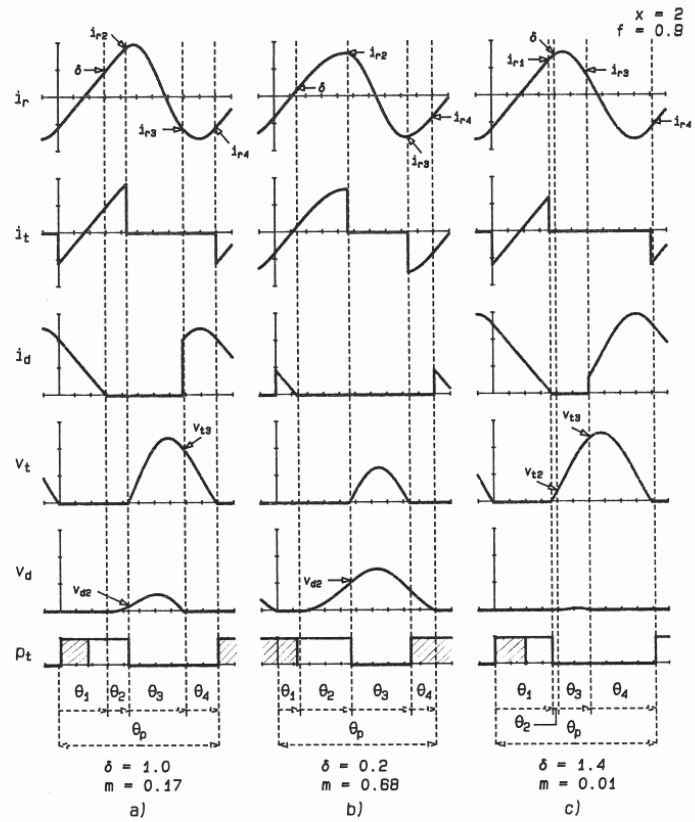

Figure 10.2: Typical waveforms for a ZV-MR converter operating in modes I_1 (a), II_1 (b) or III_1 (c).

D Maksimovic, "Synthesis of PWM and Quasi-Resonant DC-to-DC Power Converters," Ph.D. Thesis, CalTech 1989

Identification of Resonant Switch

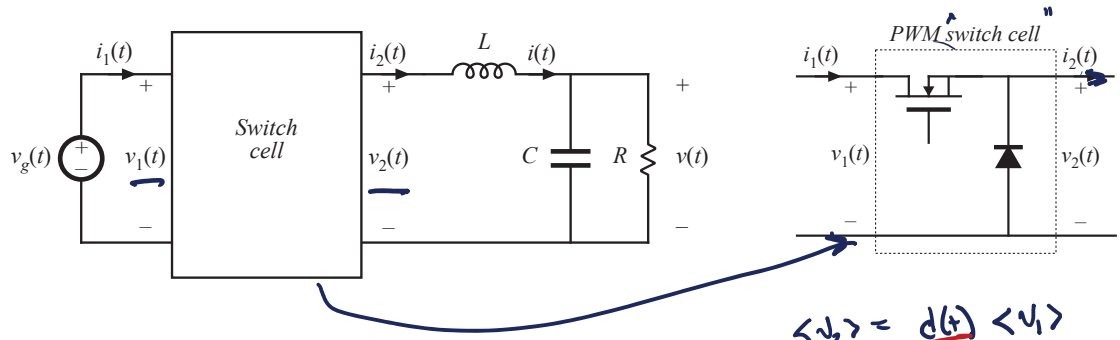

$\langle v_2 \rangle = d(t) \langle v_1 \rangle$

$\langle i_1 \rangle = d(t) \langle i_2 \rangle$

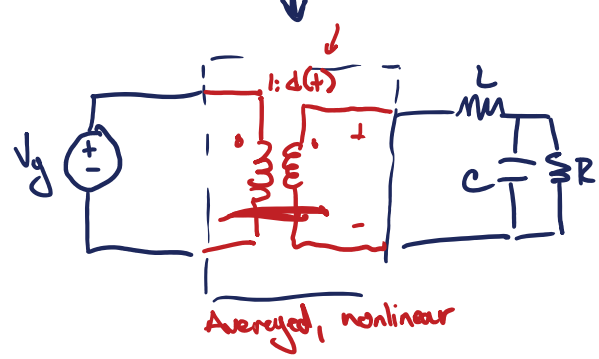

Switching Cell Conversion Ratio

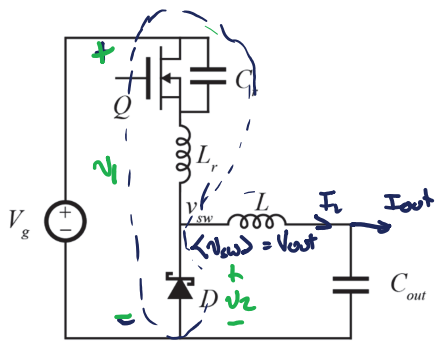

$M = f(F, J_L)$

derived by: $V = \langle v_{sw} \rangle$

M is also $\frac{\langle v_{sw} \rangle}{\langle v_g \rangle}$

$\langle v_2 \rangle = M \langle v_1 \rangle$, $\langle i_1 \rangle = M \langle i_2 \rangle$

Unique to Buck converter

More Generally:

μ = switch cell conversion ratio

$\langle v_2 \rangle = \mu \langle v_1 \rangle$, $\langle i_1 \rangle = \mu \langle i_2 \rangle$

Buck is a special case, where $\mu = M$

for any other parent PWM topology $\mu \neq M$

Take PWM averaged analysis & replace $d(t)$ w/ $\mu(t)$ to get overall conversion ratio

Boost $M = \frac{1}{1-D}$ → resonant $M = \frac{1}{1-\mu}$

Conversion Ratios of Various Switch Cells

$$P_{1/2}(x) = \frac{1}{2\pi}\left[\frac{1}{2}x + \pi + \sin^{-1}x + \frac{1}{x}\left(1 - \sqrt{1-x^2}\right)\right]$$

$$P_1(x) = \frac{1}{2\pi}\left[\frac{1}{2}x + 2\pi + \sin^{-1}x + \frac{1}{x}\left(1 - \sqrt{1-x^2}\right)\right] \approx 1$$

Switch Cell	Conv. Ratio μ	Current Range	Conv. Ratio Range	Requirements on *Q*
PWM	D	N/A	$0 \le \mu \le 1$	
ZVS-QR (half)	$\mathbf{1 - F \cdot P_{\frac{1}{2}}\left(\frac{1}{J_L}\right)}$	$\mathbf{1 \le J_L \le \infty}$	$\mathbf{0 \le \mu \le 1}$	
ZVS-QR (full)	$1 - FP_1\left(\frac{1}{J_L}\right)$	$1 \le J_L \le \infty$	$0 \le \mu \le 1$	Bidirectional voltage
ZCS-QR (half)	$FP_{\frac{1}{2}}(J_L)$	$0 \le J_L \le 1$	$0 \le \mu \le 1$	Unidirectional Current*
ZCS-QR (full)	$FP_1(J_L)$	$0 \le J_L \le 1$	$0 \le \mu \le 1$	

Resonant Switch Identification Examples

Flyback

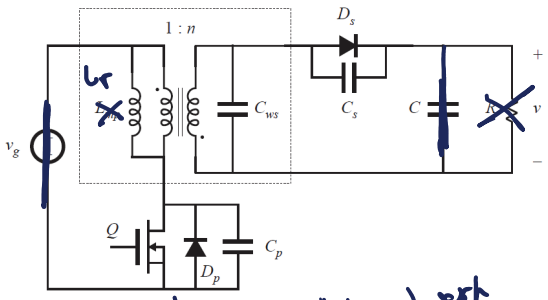

ac - switch network

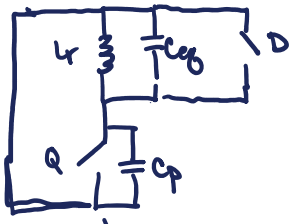

ZVS-Qsw
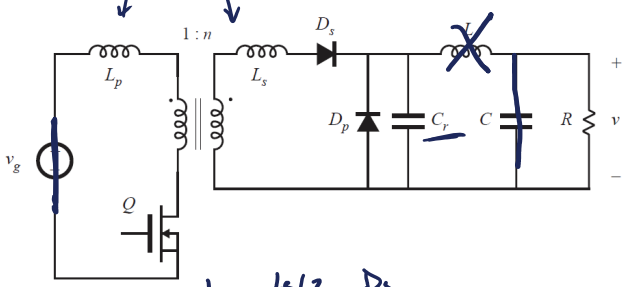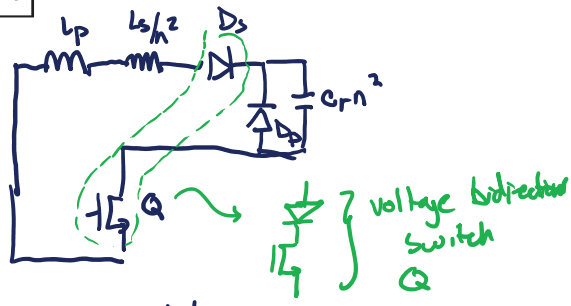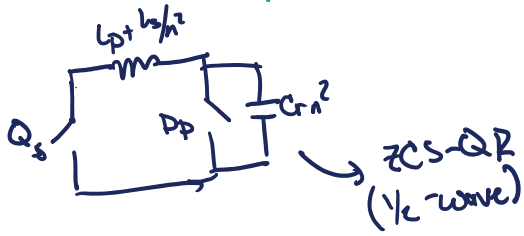
resonant Forward