Dickson Output Resistance

$$R_{o,SSL} = \sum_{i \in caps} \frac{(a_{ci})^2}{C_i f_s}$$

Assume all $C_i = C_{fly}$

$$R_{o,SSL} = 5 \frac{(1/6)^2}{C_{fly} f_s} = \boxed{\frac{5}{36} \frac{1}{C_{fly} f_s} = R_{o,SSL}}$$

6:1 Dickson Converter Simulation

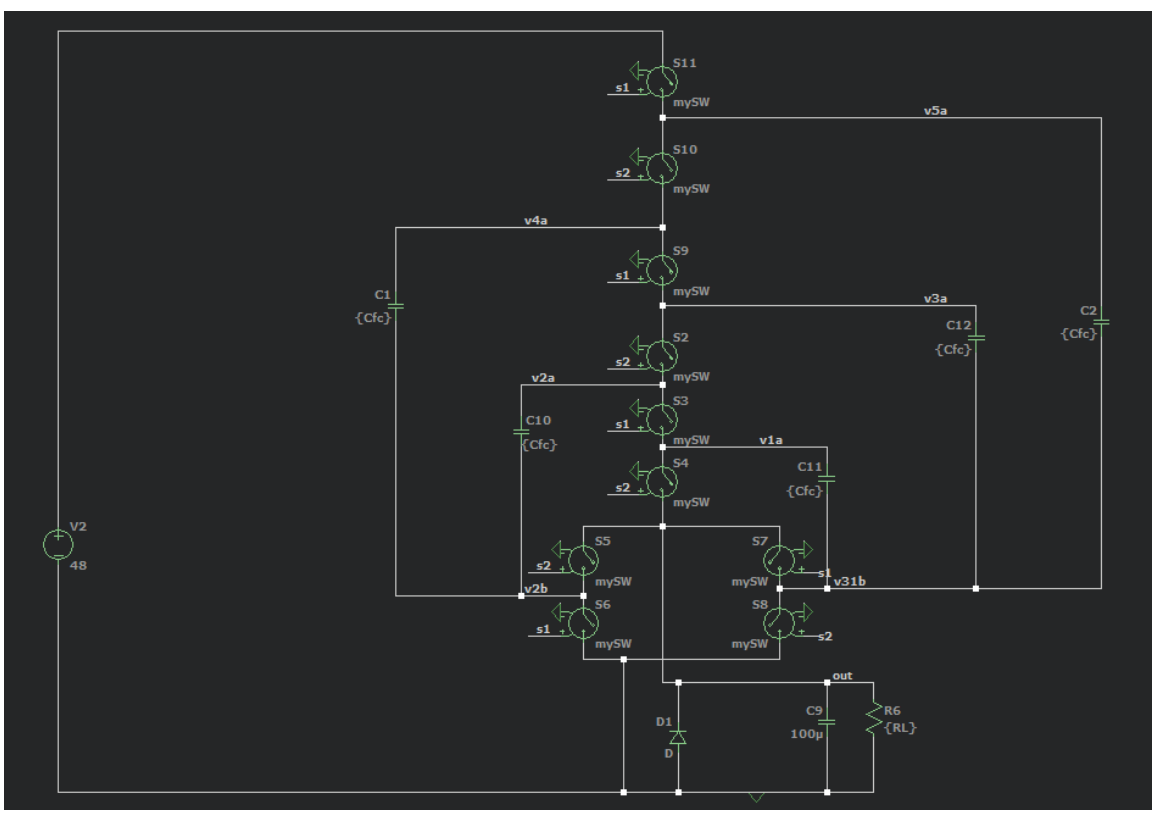

Simulation Comparison to Model

fixed f_s= 1MHZ

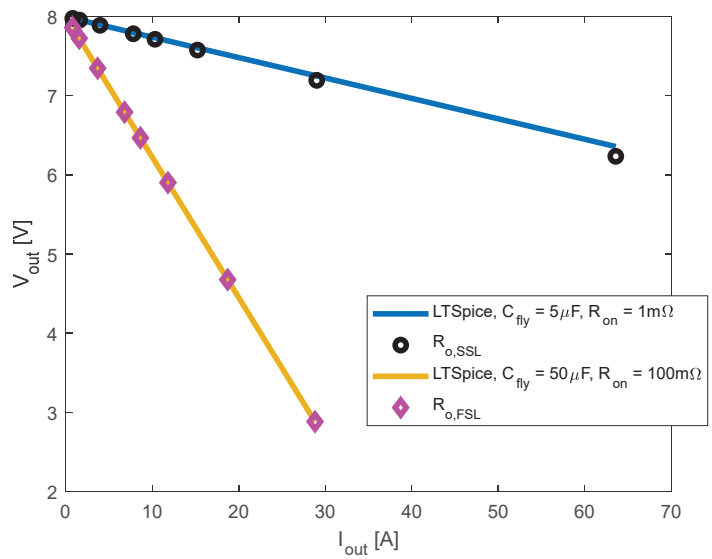

R_o vs Switching Frequency

fixed R_{on}= 10mΩ, C_{fly} = 5μF

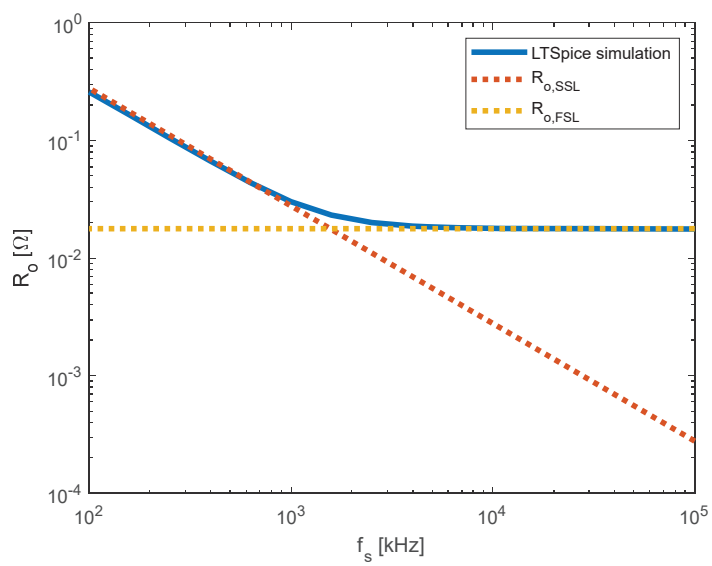

Switching Losses in SC Converters

Hybrid Dickson converter

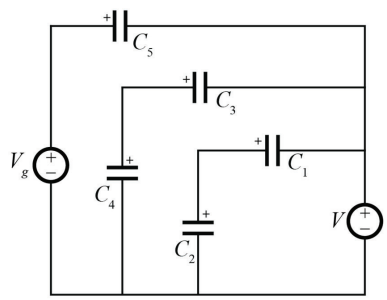

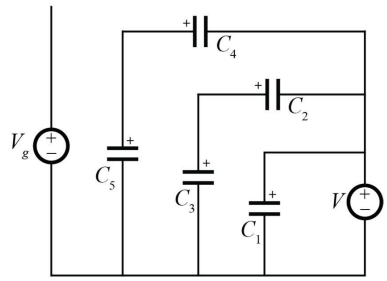

Split-Phase Control

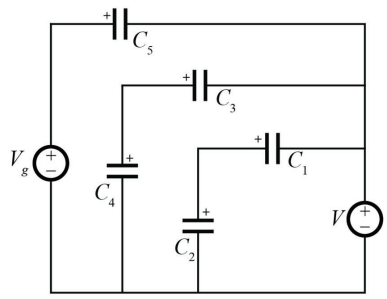

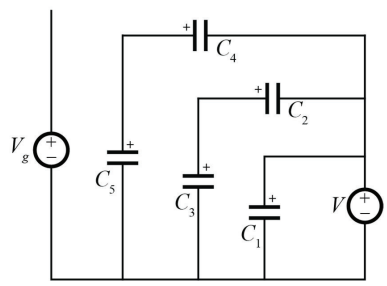

Y. Lei, R. May, and R. Pilawa-Podgurski, "Split-Phase Control: Achieving Complete Soft-Charging Operation of a Dickson Switched- Capacitor Converter," 2016

LTSpice Simulation