Hybrid Dickson converter

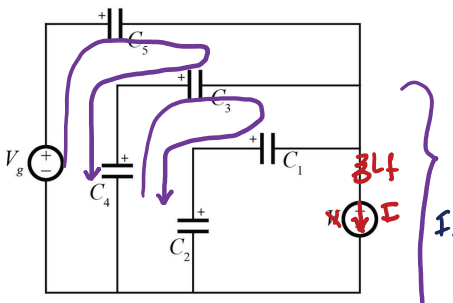

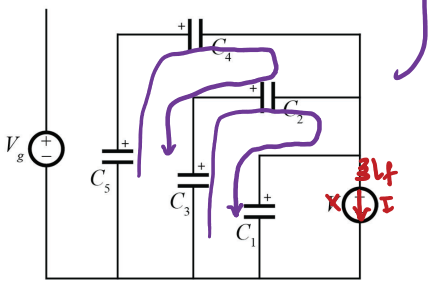

In either subinterval, DC solution is

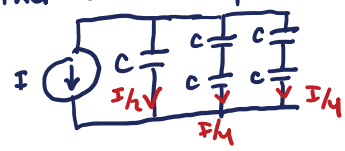

However, there are also pure V-C loops.

If any current flows in the V-C loops, there will still be charge-sharing loss.

Assume current is only I_{out} DC solution:
i.e. zero current in V-C paths

$$\bar{a}^{I} = \begin{array}{c} \left[\begin{array}{cccccc} -\frac{1}{4} & \frac{1}{8} & -\frac{1}{8} & \frac{1}{8} & -\frac{1}{8} & \frac{1}{4} & \frac{1}{2} \end{array}\right] \end{array} \frac{\cancel{I_{out}}\ \cancel{I_5}}{\cancel{I_{out}}\ \cancel{I_5}}$$

in C_1 C_2 C_3 C_4 C_5 out

$$\bar{a}^{II} = \left[\begin{array}{ccccccc} \phi & -\frac{1}{4} & \frac{1}{8} & -\frac{1}{8} & \frac{1}{8} & -\frac{1}{8} & \frac{1}{2} \end{array}\right]$$

Split-Phase Control

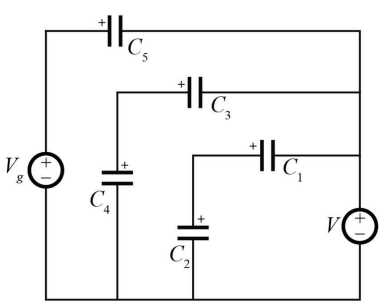

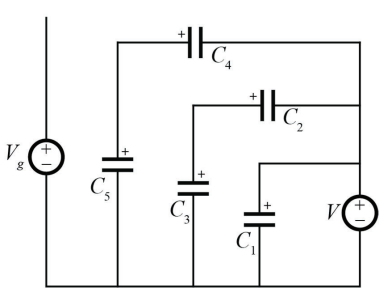

Y. Lei, R. May, and R. Pilawa-Podgurski, "Split-Phase Control: Achieving Complete Soft-Charging Operation of a Dickson Switched- Capacitor Converter," 2016

LTSpice Simulation

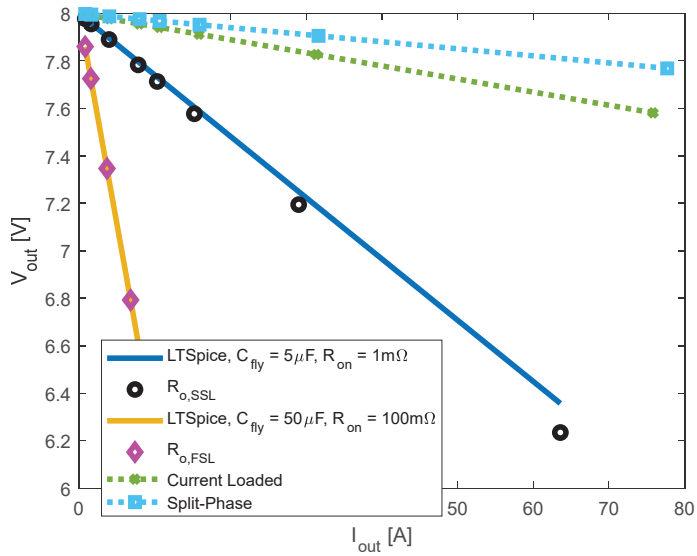

Switching Losses in SC Converters

THE UNIVERSITY OF TENNESSEE KNOXVILLE