Example Simulation

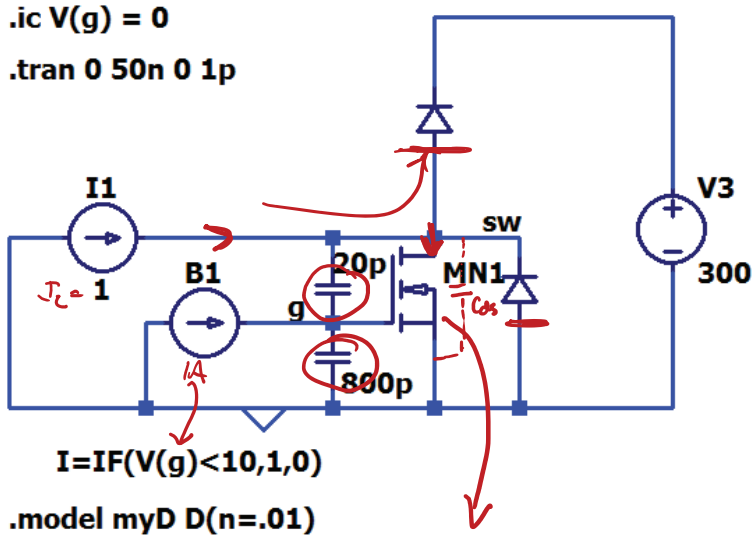

Simulation Waveforms – Turn On

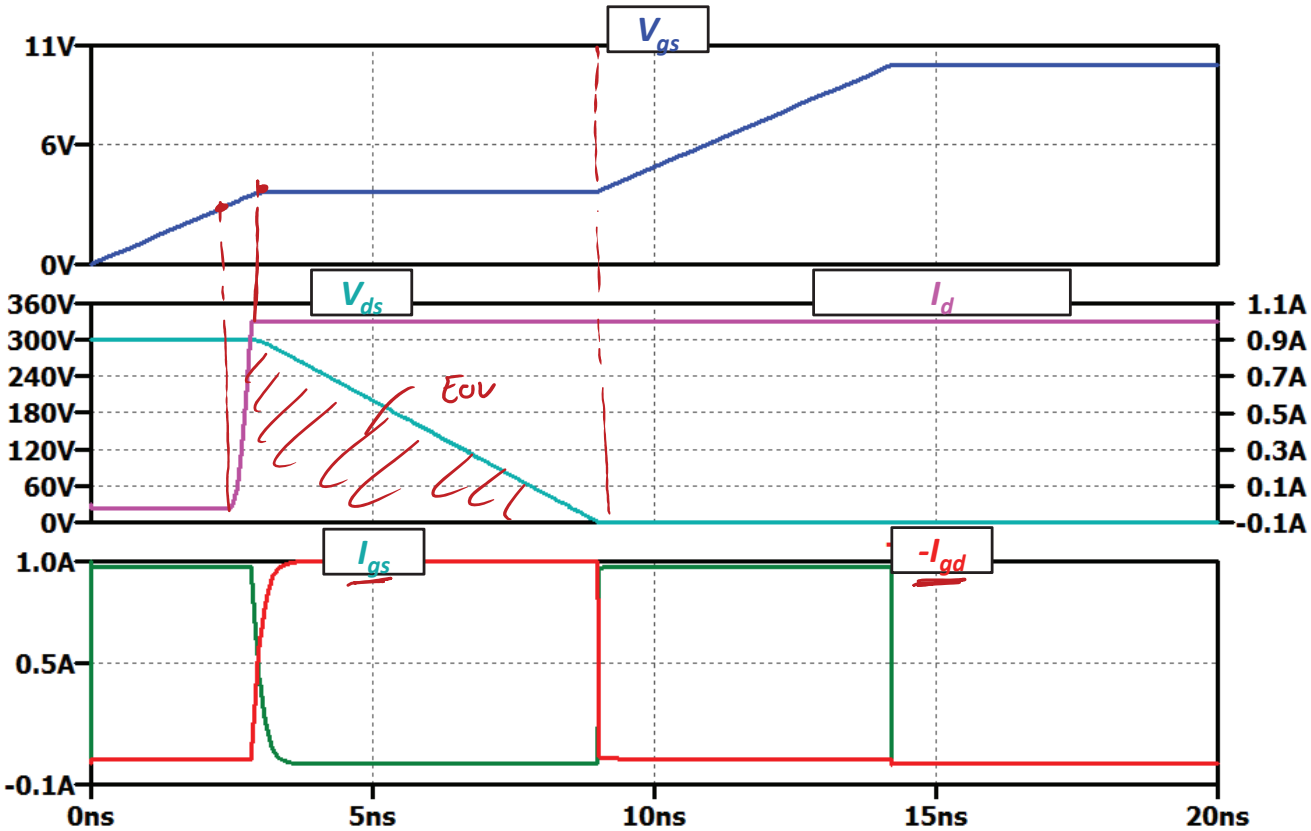

Turn-Off Transition

$(M_2, I_L > 0)$

$C_{ds} = \phi$

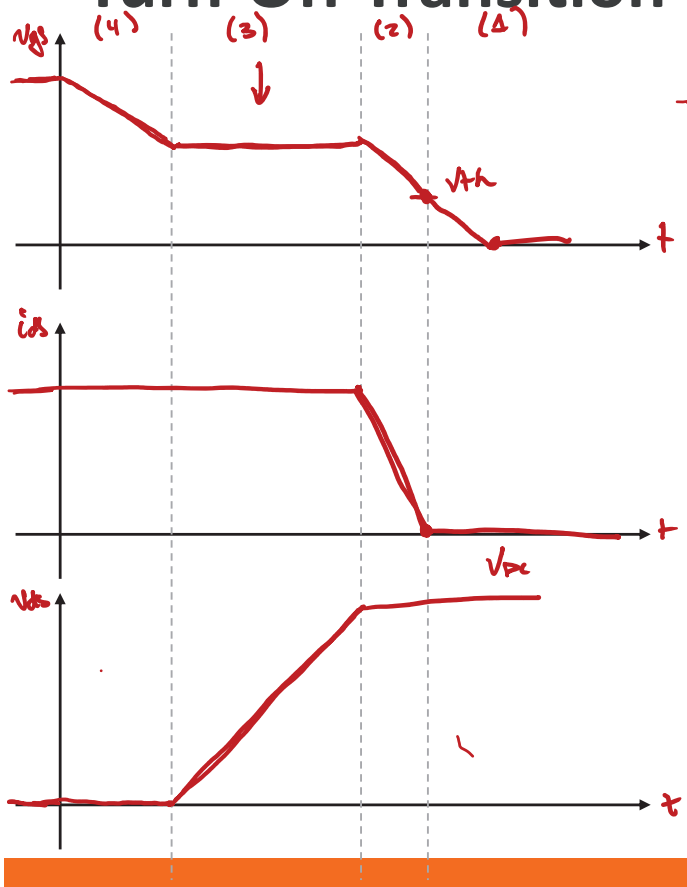

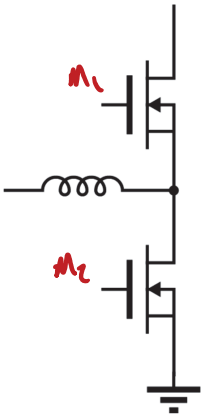

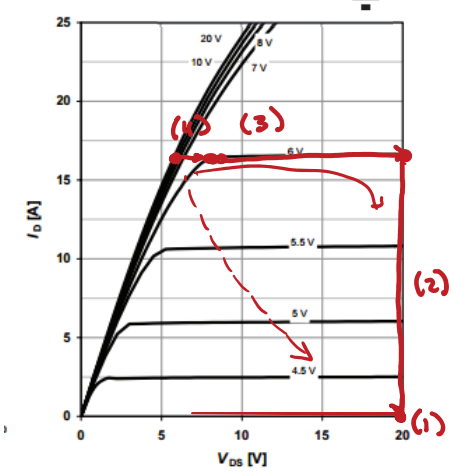

Turn-off

$C_{ds} = \phi$

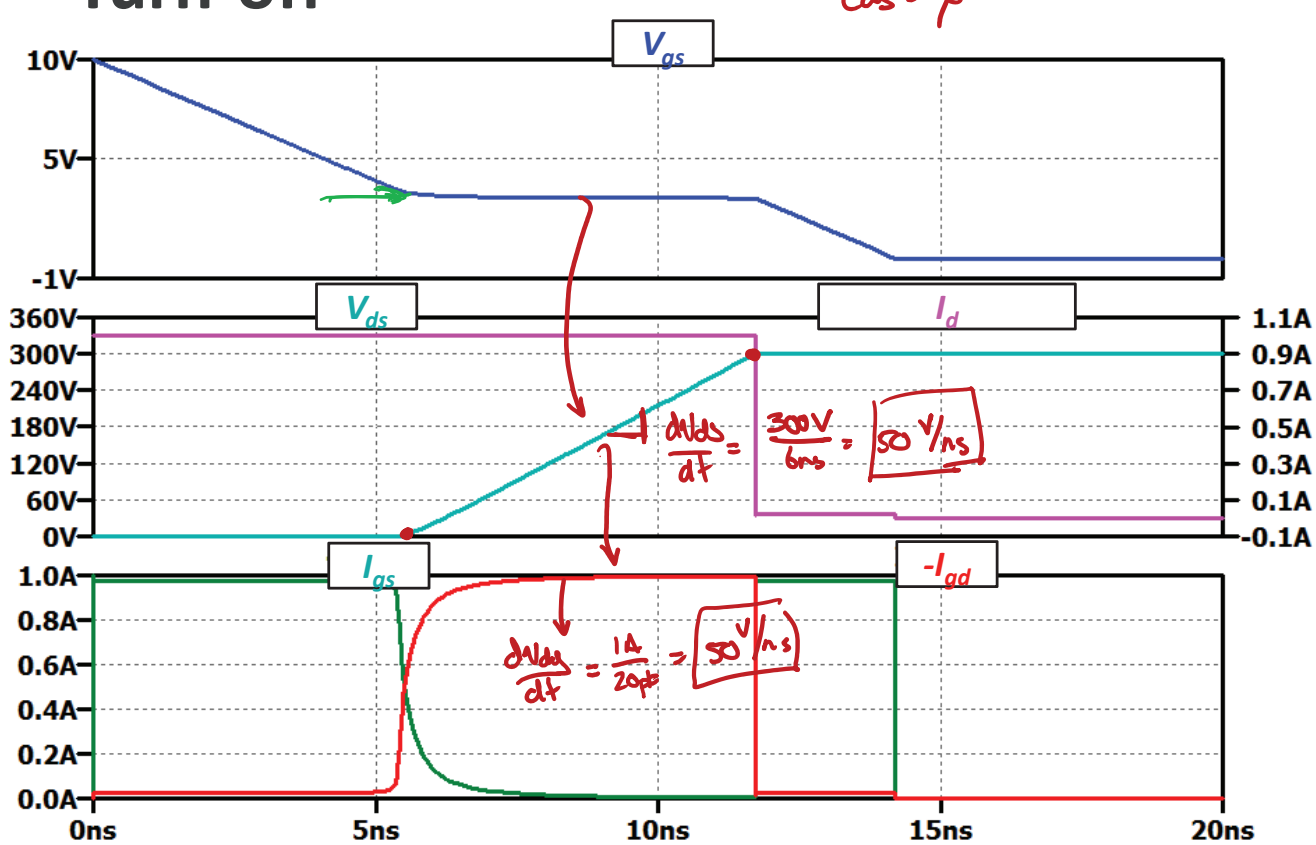

Turn-Off (Drain Dominated)

$C_{ds} \gg \phi$

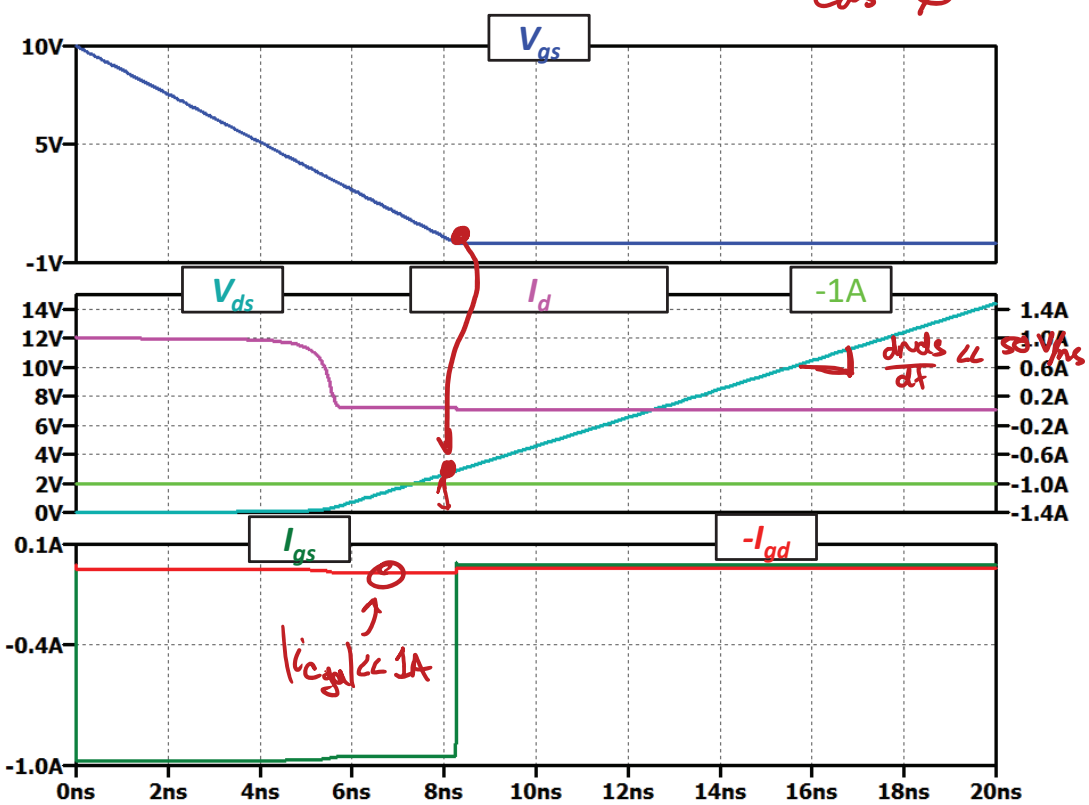

Gate- vs. Drain-Limited Switching

Drain-Limited

(Ideal) FET turns fully off before V_{ds} begins to rise (fast gate driver)

$$\frac{dV_{ds}}{dt} = \frac{I_L}{C_{ds}}$$

Gate-Limited

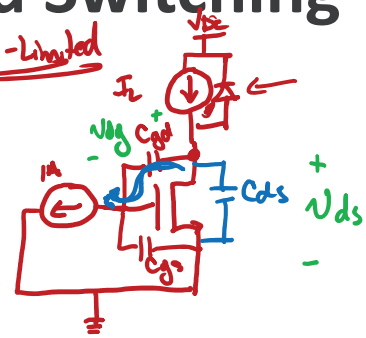

$$V_{ds} = V_{dg} + V_{gs}$$

clamped @ V_m

$$\frac{dV_{ds}}{dt} = \frac{dV_{dg}}{dt} + \phi$$

$$\frac{dV_{dg}}{dt} = \frac{i_{dg}}{C_{gd}} = \frac{I_g}{C_{gd}} = \frac{dV_{ds}}{dt}$$

$$\boxed{\frac{I_g}{C_{gd}} \gg \frac{I_L}{C_{ds}}}$$

then $P_{ov}(off) \approx \phi$

if opposite is true $\frac{I_L}{C_{ds}} \gg \frac{I_g}{C_{gd}}$ $\rightarrow P_{ov}(off) \approx P_{ov}(on)$

Simulation Results: Cds Sweep