ECE341 HW #10

P1. Problem **5.2** (in 8/E & 7/E)

5.2 When a particle with charge q and mass m is introduced into a medium with a uniform field $\mathbf{B}$ such that the initial velocity of the particle $\mathbf{u}$ is perpendicular to $\mathbf{B}$ (**Fig. P5.2**), the magnetic force exerted on the particle causes it to move in a circle of radius a. By equating $\mathbf{F}_m$ to the centripetal force on the particle, determine a in terms of q, m, u, and $\mathbf{B}$.

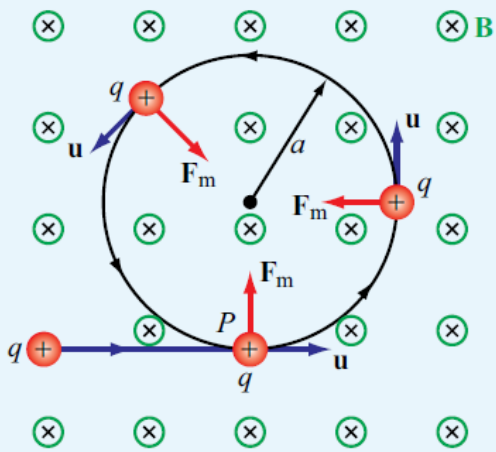

Figure P5.2 Particle of charge q projected with velocity $\mathbf{u}$ into a medium with a uniform field $\mathbf{B}$ perpendicular to $\mathbf{u}$ (Problem 5.2).

P2. Problem **5.4** (in 8/E & 7/E)

5.4 The rectangular loop shown in **Fig. P5.4** consists of 20 closely wrapped turns and is hinged along the z axis. The plane of the loop makes an angle of 30° with the y axis, and the current in the windings is 0.5 A. What is the magnitude of the torque exerted on the loop in the presence of a uniform field $\mathbf{B} = \hat{\mathbf{y}}\,2.4$ T? When viewed from above, is the expected direction of rotation clockwise or counterclockwise?

Hint: The angle that the plane of the loop makes with the y axis must be considered.

Note: Answer in Appendix E at end of book.

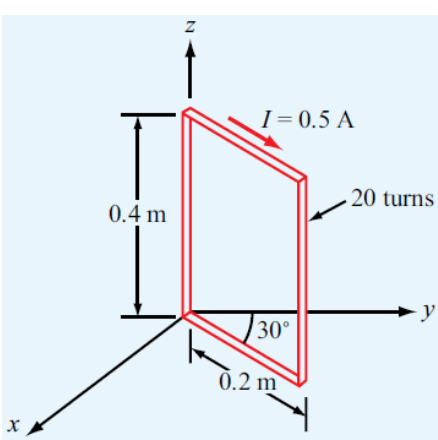

Figure P5.4 Hinged rectangular loop of Problem 5.4.

P3. Problem **5.7** (in 8/E & 7/E).
Hint: Add up the fields due to all four sides. "Magnetic flux density" means **B**.
Note: Answer in Appendix E at end of book.

P4. Problem **5.13** (in 8/E & 7/E).
Note: The problem is not well stated. Change "power cable" to "DC current-carrying wire", as we usually understand a "power cable" as two wires carrying opposite AC currents.
Hint: The field is a vector! You know the direction of the earth's magnetic field.
Note: Answer in Appendix E at end of book.

P5. Problem **5.16** (in 8/E & 7/E).
Note: Answer in Appendix E at end of book.

P6. Problem **5.22** (in 8/E & 7/E).
Note: Follow the same method as in example given in class. Just need a tad more math.
Answer: $\mathbf{H} = J_0\,\hat{\boldsymbol{\varphi}}$ for $r < a$, and $\mathbf{H} = J_0(a/r)\,\hat{\boldsymbol{\varphi}}$ for $r > a$.

P7. Problem **3.58**
Note: This is a Chapter 3 problem. Answer in Appendix E at end of book.
Do (b) thru (d). You answered whether the fields are solenoidal in HW #8. Now, only answer if the fields are conservative.
A field is said to be solenoidal if its divergence is zero.
A field is said to be conservative if its curl is zero.